SONY®

VIDEO PROJECTOR

VPL-VW50

REMOTE COMMANDER

RM-PJVW100

SERVICE MANUAL

1st Edition

⚠警告

このマニュアルは，サービス専用です。
お客様が，このマニュアルに記載された設置や保守，点検，修理などを行うと感電や火災，人身事故につながることがあります。
危険をさけるため，サービストレーニングを受けた技術者のみご使用ください。

⚠ WARNING

This manual is intended for qualified service personnel only.
To reduce the risk of electric shock, fire or injury, do not perform any servicing other than that contained in the operating instructions unless you are qualified to do so. Refer all servicing to qualified service personnel.

⚠ WARNUNG

Die Anleitung ist nur für qualifiziertes Fachpersonal bestimmt.
Alle Wartungsarbeiten dürfen nur von qualifiziertem Fachpersonal ausgeführt werden. Um die Gefahr eines elektrischen Schlages, Feuergefahr und Verletzungen zu vermeiden, sind bei Wartungsarbeiten strikt die Angaben in der Anleitung zu befolgen. Andere als die angegeben Wartungsarbeiten dürfen nur von Personen ausgeführt werden, die eine spezielle Befähigung dazu besitzen.

⚠ AVERTISSEMENT

Ce manual est destiné uniquement aux personnes compétentes en charge de l’entretien. Afin de réduire les risques de décharge électrique, d’incendie ou de blessure n’effectuer que les réparations indiquées dans le mode d’emploi à moins d’être qualifié pour en effectuer d’autres. Pour toute réparation faire appel à une personne compétente uniquement.

警告

電池は，間違ったタイプと交換した場合，破裂の危険がある。
使用済み電池は，地域のルールに従って処分すること。

CAUTION

RISK OF EXPLOSION IF BATTERY IS REPLACED BY INCORRECT TYPE.
DISPOSE OF USED BATTERIES ACCORDING TO THE RULE IN REGION.

Table of Contents

1. Service Information

1-1. Appearance Figure 1-1
1-2. Board Locations 1-1
1-3. Disassembly 1-2
1-3-1. Top Cover Assembly 1-4
1-3-2. Hood Assembly 1-4
1-3-3. HA Board and NR Board 1-5
1-3-4. Front Panel Assembly 1-5
1-3-5. Optics Block 1-6
1-3-6. C Board 1-7
1-3-7. Optics Unit Assembly 1-7
1-3-8. Lamp Fan 1-8
1-3-9. TA Board 1-9
1-3-10. Lamp Power Supply 1-10
1-3-11. GA Board and GB Board-1 1-11
1-3-12. GA Board and GB Board-2 1-12
1-3-13. Lamp Fan (Sirocco) 1-12
1-3-14. Louver (R) 1-13
1-3-15. Q Board-1 1-14
1-3-16. Q Board-2 1-15
1-3-17. U Board 1-15
1-3-18. GS Board 1-16
1-3-19. F Board 1-16
1-3-20. Extension Boards and Extension Cables 1-17
1-3-21. How to Extend Boards 1-18
1-4. Unleaded Solder 1-20
1-5. Service Know-How 1-20
1-5-1. When the Optical Unit ASSY is Replaced 1-20
1-5-2. When the Board is Replaced 1-20
1-5-3. IRIS Copy 1-20
1-5-4. W/B Copy 1-20
1-6. Upgrading the Software 1-21
1-7. Memory 1-22
1-8. Warning on Power Connection 1-24

2. Electrical Adjustments

2-1. Preparations 2-1
2-1-1. Required Equipment 2-1
2-1-2. Service Mode Setting 2-1
2-2. Adjustment Item Initialize Data 2-2
2-3. White Balance Adjustment on Servicing 2-6
2-3-1. Component 2-6
2-3-2. Computer 2-7

3. Semiconductors

4. Spare Parts

4-1. Notes on Repair Parts 4-1
4-2. Exploded Views 4-2
4-3. Electrical Parts List 4-9

5. Block Diagrams

Overall 5-1
Q (1/2) 5-2
Q (2/2), HA, HB, NF, NR, TA, TL, U 5-3
C (1/2) 5-4
C (2/2) 5-5
GA, GB (1/2), GS, F 5-6
GB (2/2) 5-7

6. Diagrams

6-1. Frame Schematic Diagrams 6-2
Frame Wiring 6-2
6-2. Schematic Diagrams and Printed Wiring Boards 6-3
Schematic Diagrams
Q (1/7) 6-3
Q (2/7) 6-4
Q (3/7) 6-5
Q (4/7) 6-6
Q (5/7) 6-7
Q (6/7) 6-8
Q (7/7) 6-9
C (1/9) 6-14
C (2/9) 6-15
C (3/9) 6-16
C (4/9) 6-17
C (5/9) 6-18
C (6/9) 6-19
C (7/9) 6-20
C (8/9) 6-21
C (9/9) 6-22

F 6-24
GA 6-25
GB (1/5) 6-30
GB (2/5) 6-31
GB (3/5) 6-32
GB (4/5) 6-33
GB (5/5) 6-34
GS 6-36
HA 6-37
HB 6-38
NF 6-39
NR 6-39
TA 6-40
TL 6-40
U 6-41
Printed Wiring Boards
Q 6-10
C 6-12
F 6-23
GA 6-26
GB 6-28
GS 6-35
HA 6-37
HB 6-38
NF 6-39
NR 6-39
TA 6-40
TL 6-40
U 6-41

Section 1
Service Information

1-1. Appearance Figure

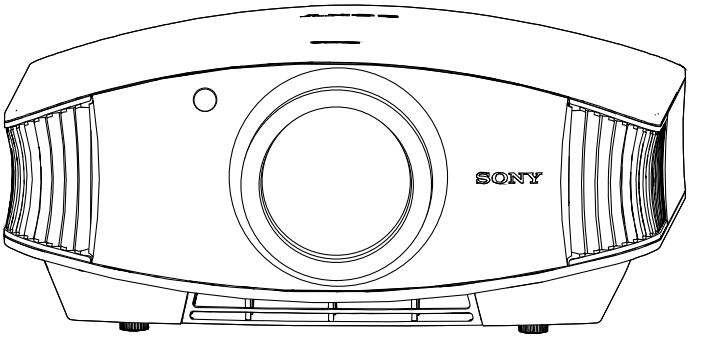

1-2. Board Locations

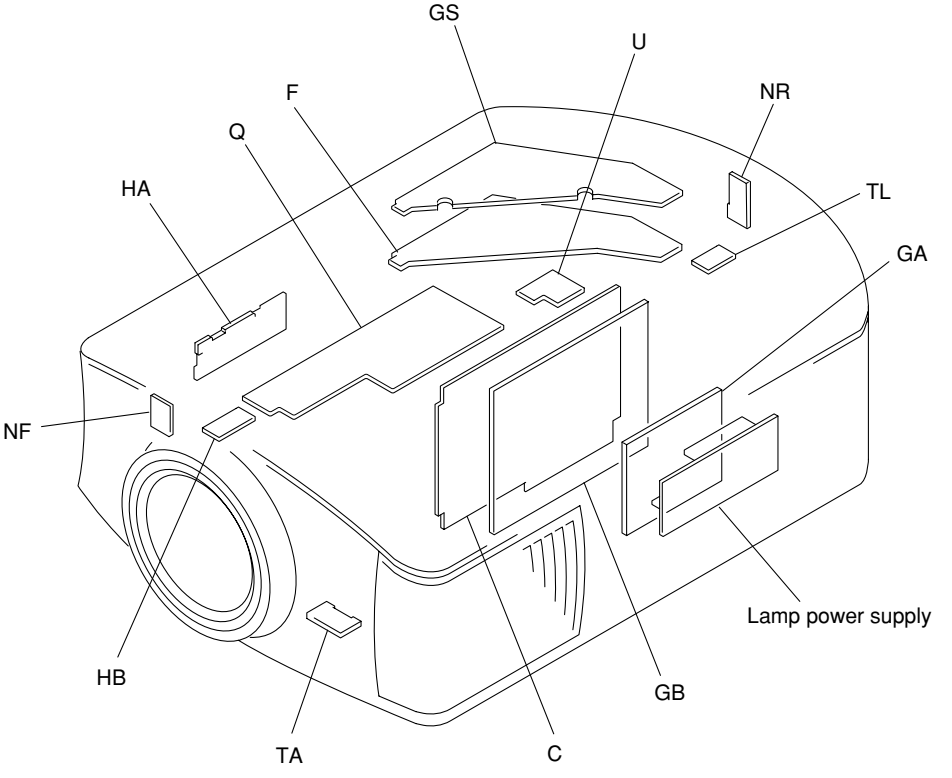

1-3. Disassembly

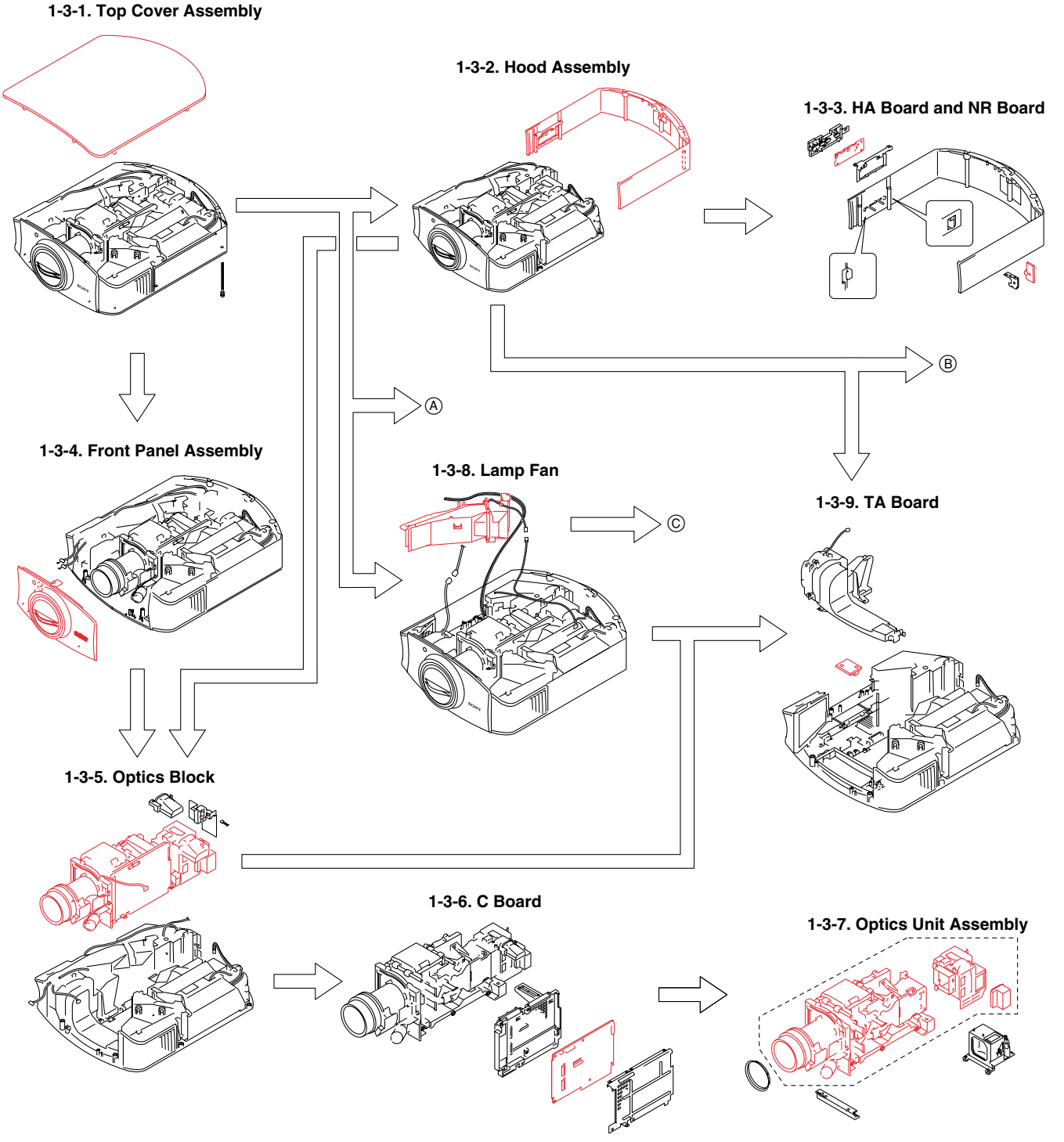

1-3-10. Lamp Power Supply

1-3-11. GA Board and GB Board-1

1-3-12. GA Board and GB Board-2

Ⓑ

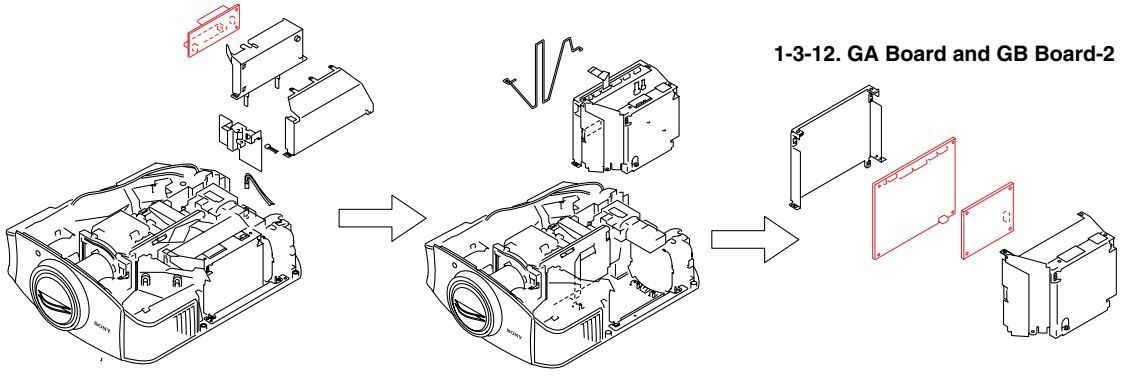

1-3-13. Lamp Fan (Sirocco)

1-3-14. Louver (R)

Ⓐ

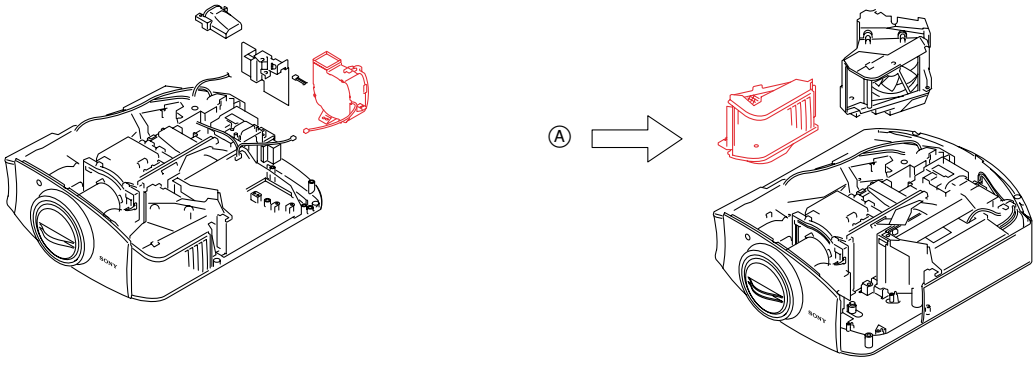

1-3-18. GS Board

1-3-19. F Board

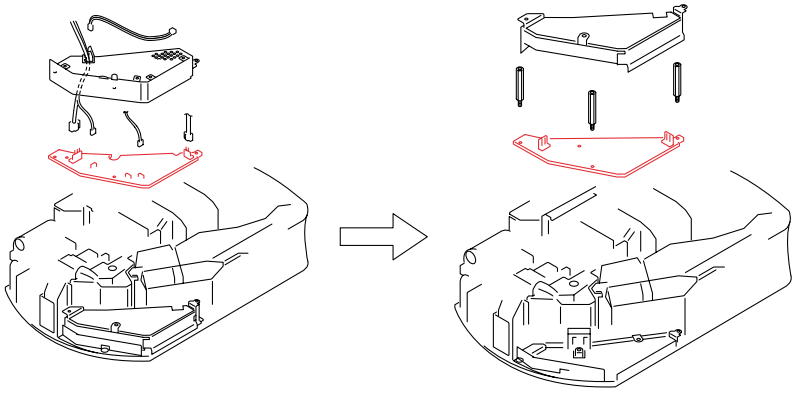

1-3-16. Q Board-2

1-3-15. Q Board-1

Ⓒ

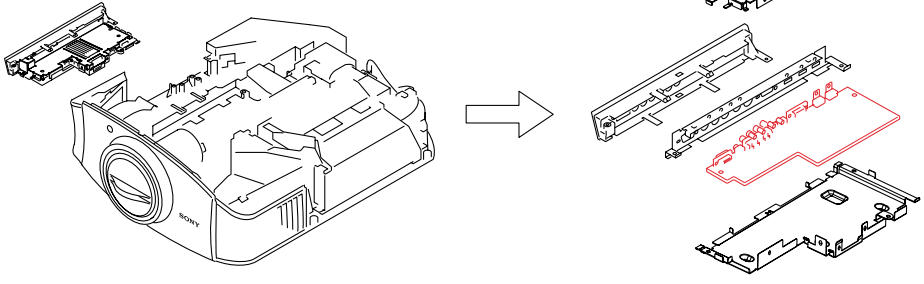

1-3-1. Top Cover Assembly

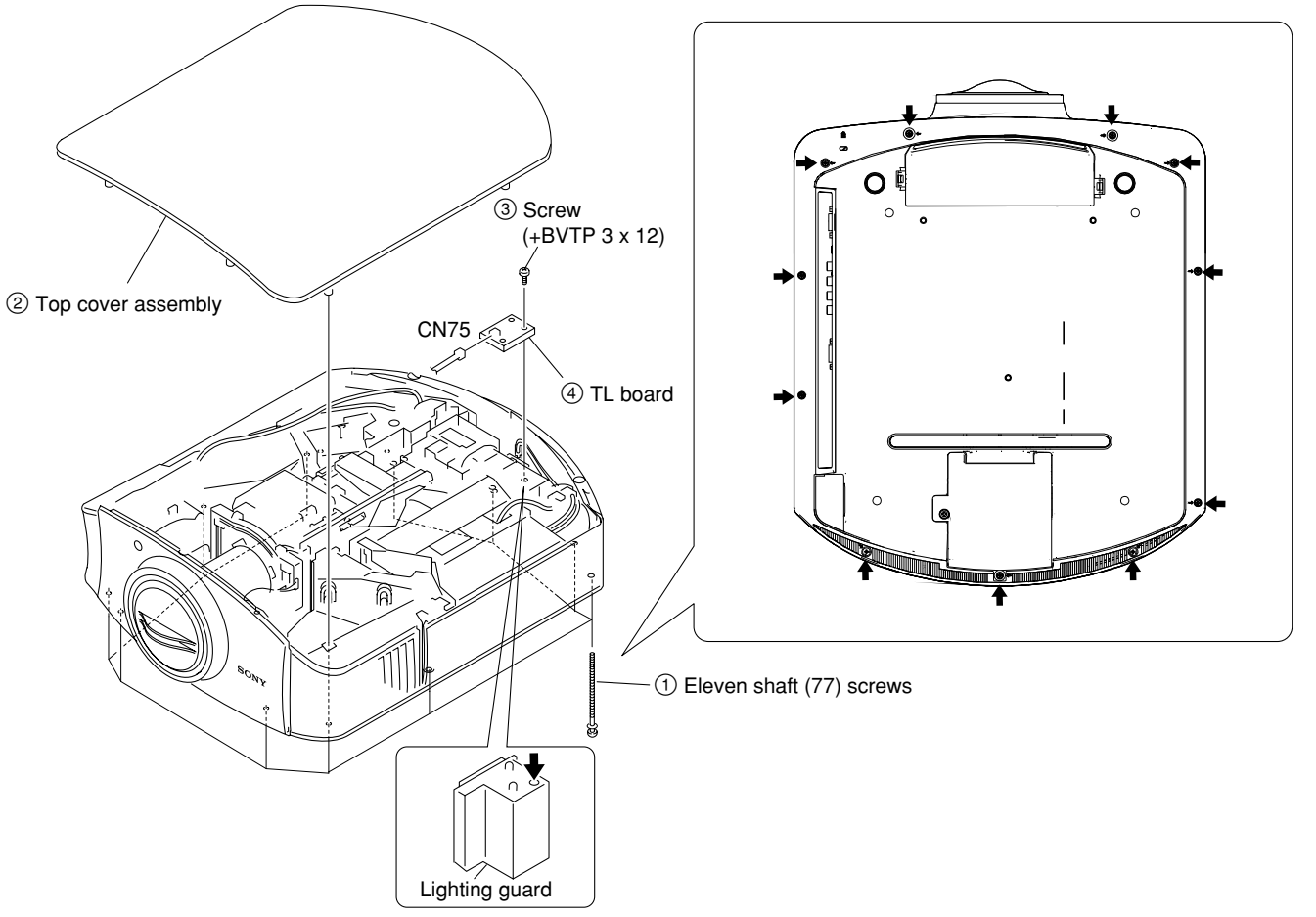

1-3-2. Hood Assembly

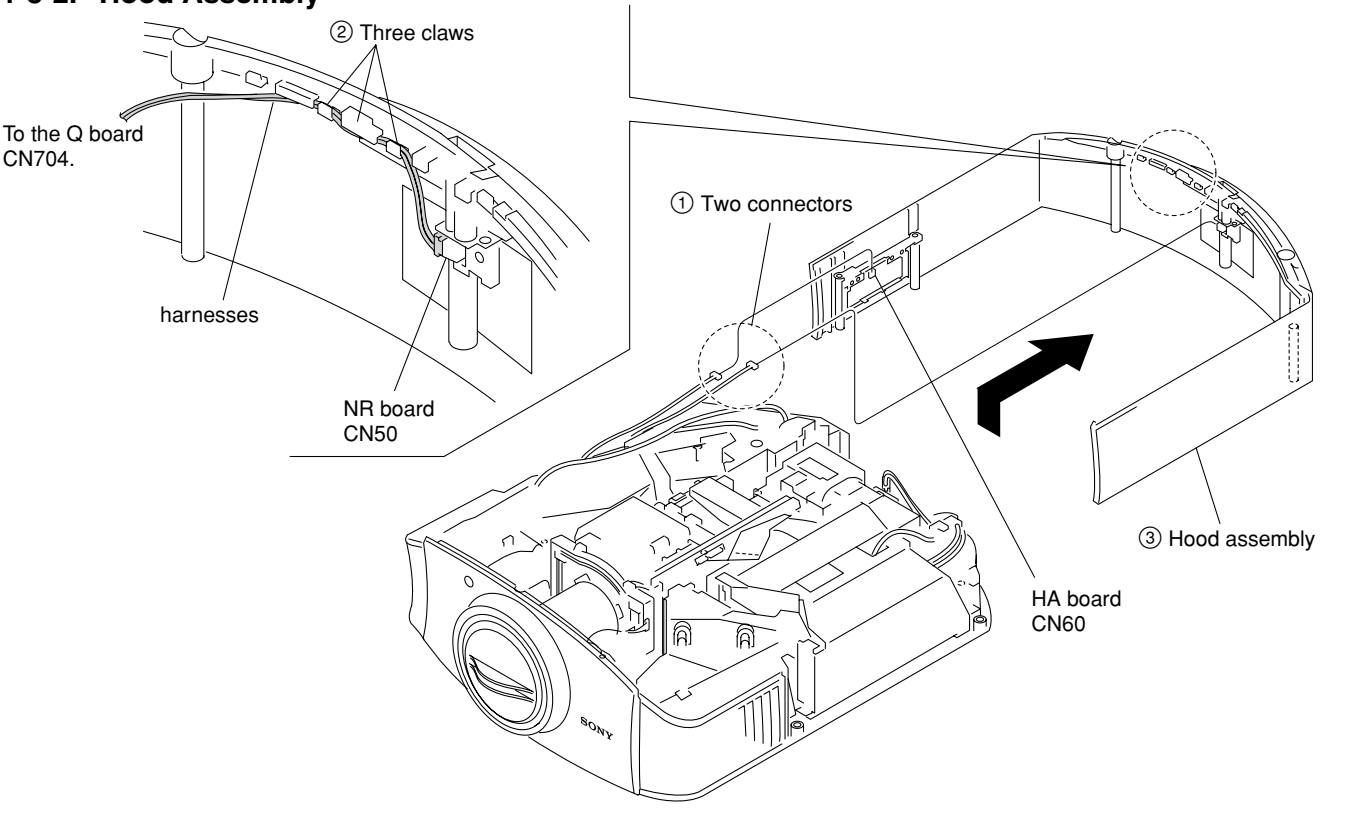

1-3-3. HA Board and NR Board

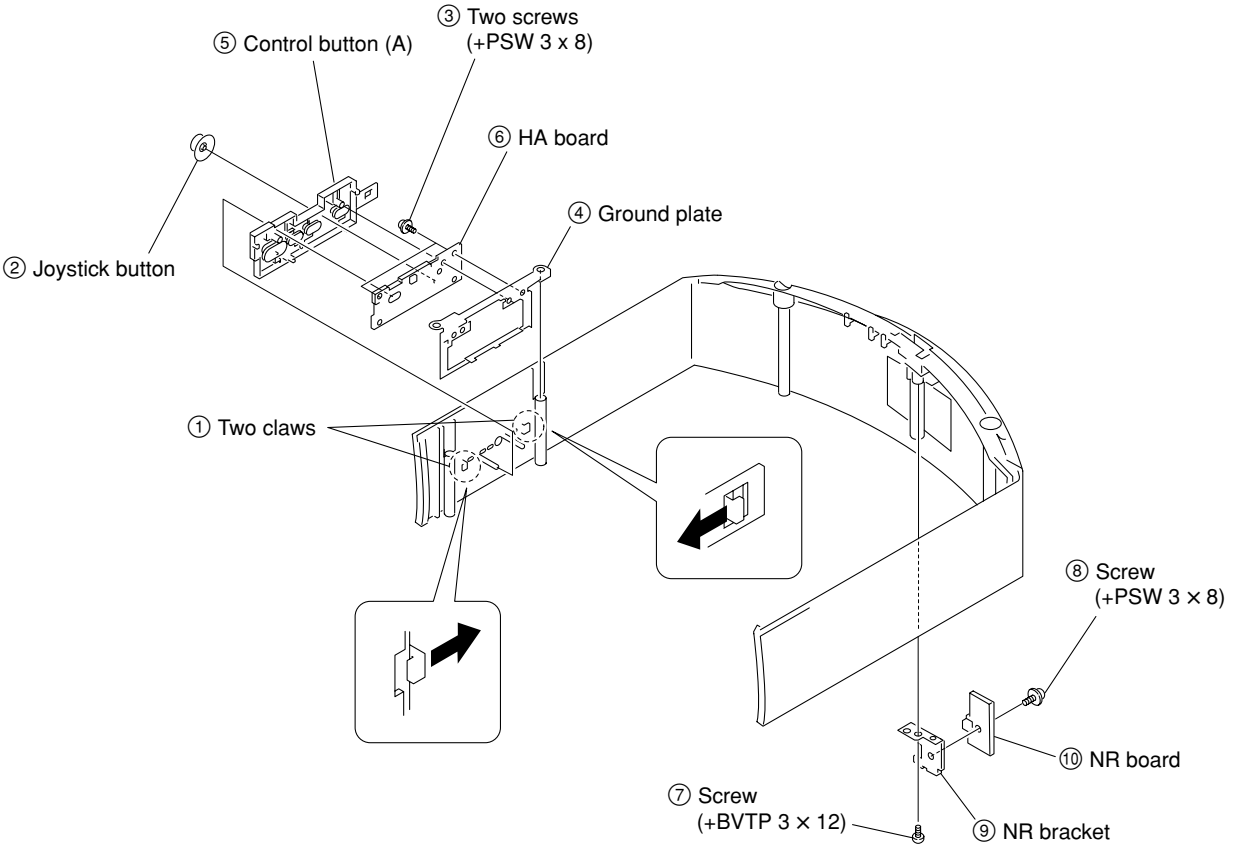

1-3-4. Front Panel Assembly

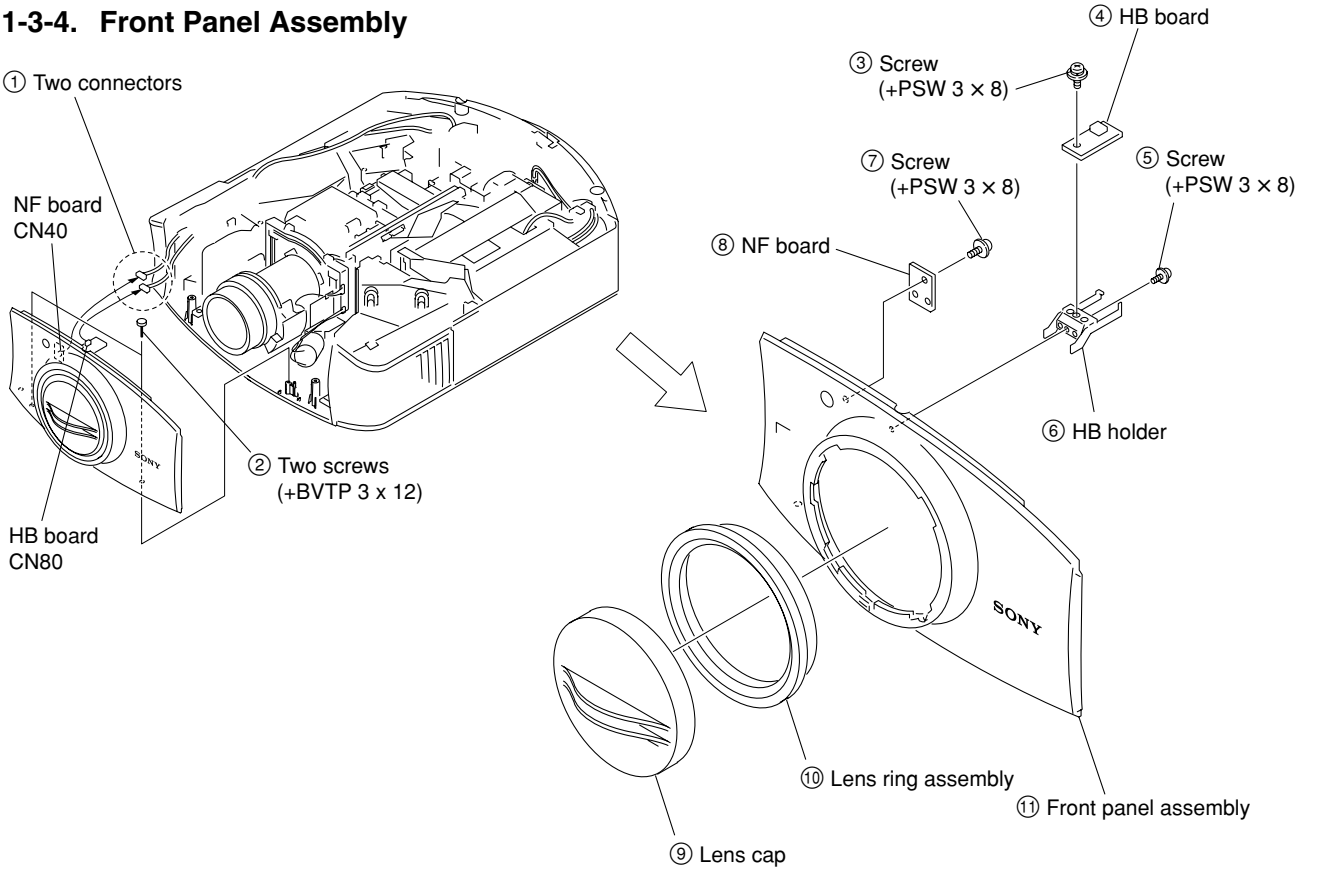

1-3-5. Optics Block

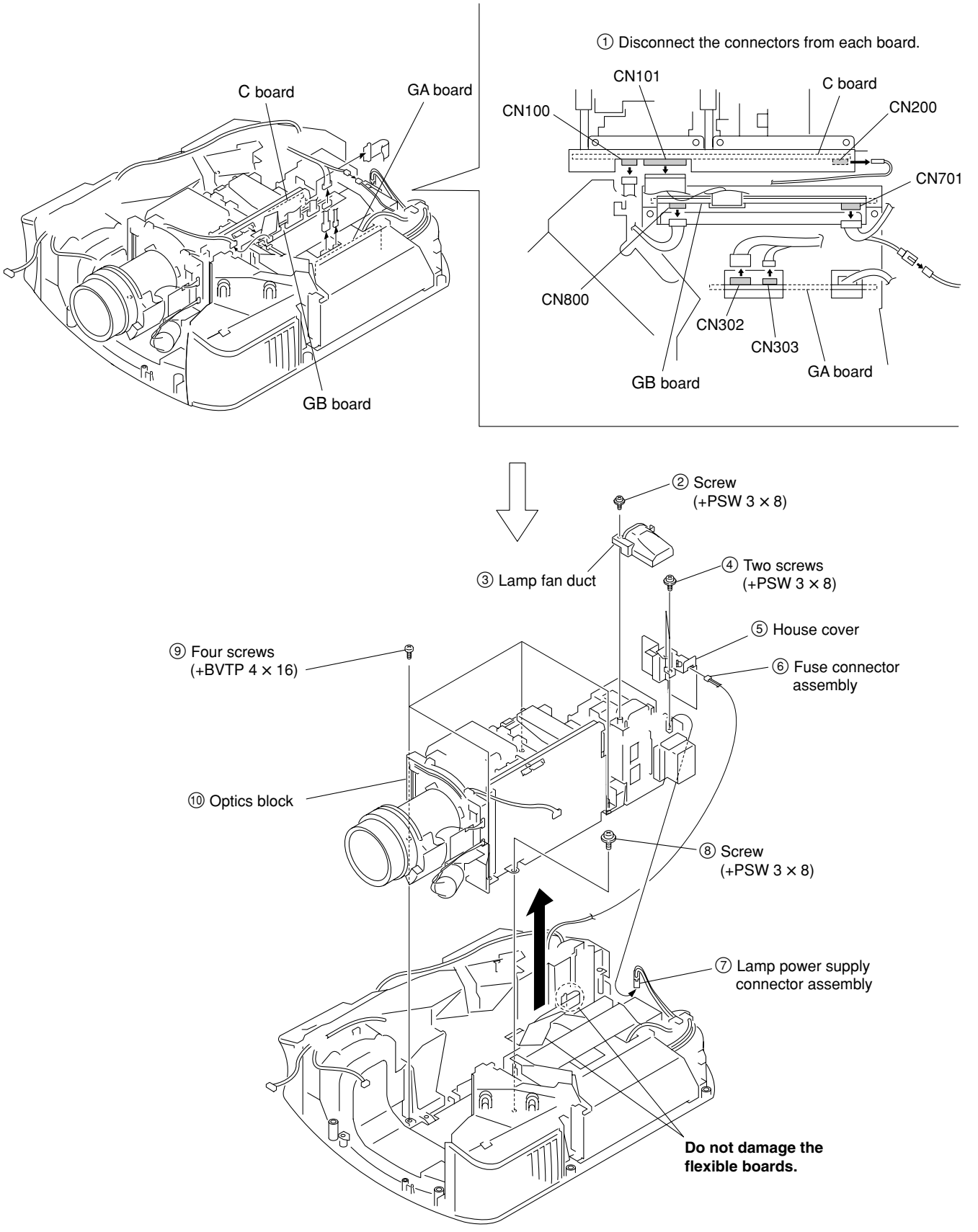

1-3-6. C Board

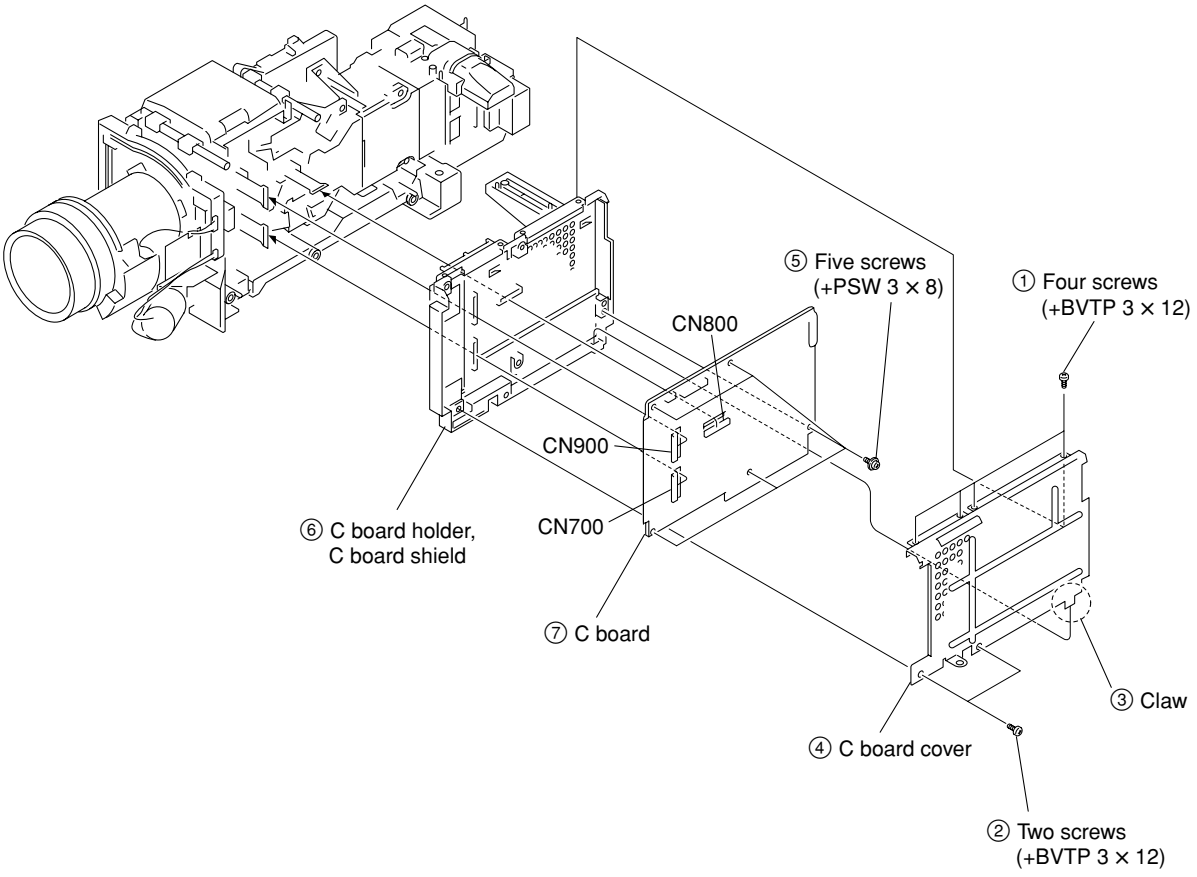

1-3-7. Optics Unit Assembly

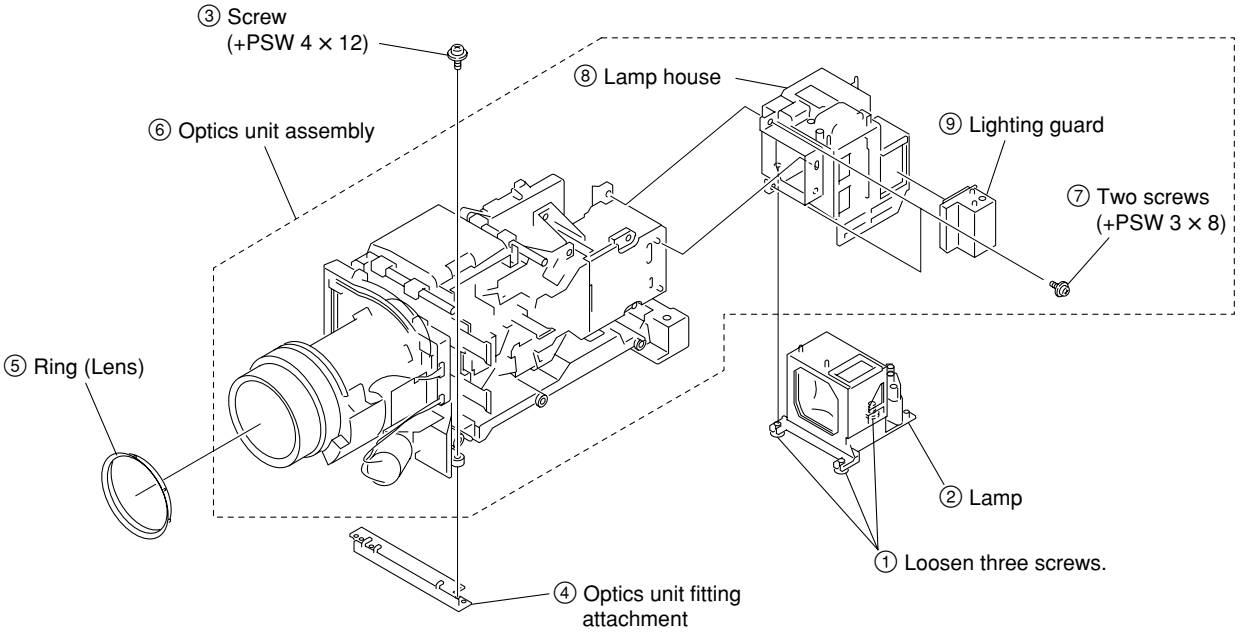

1-3-8. Lamp Fan

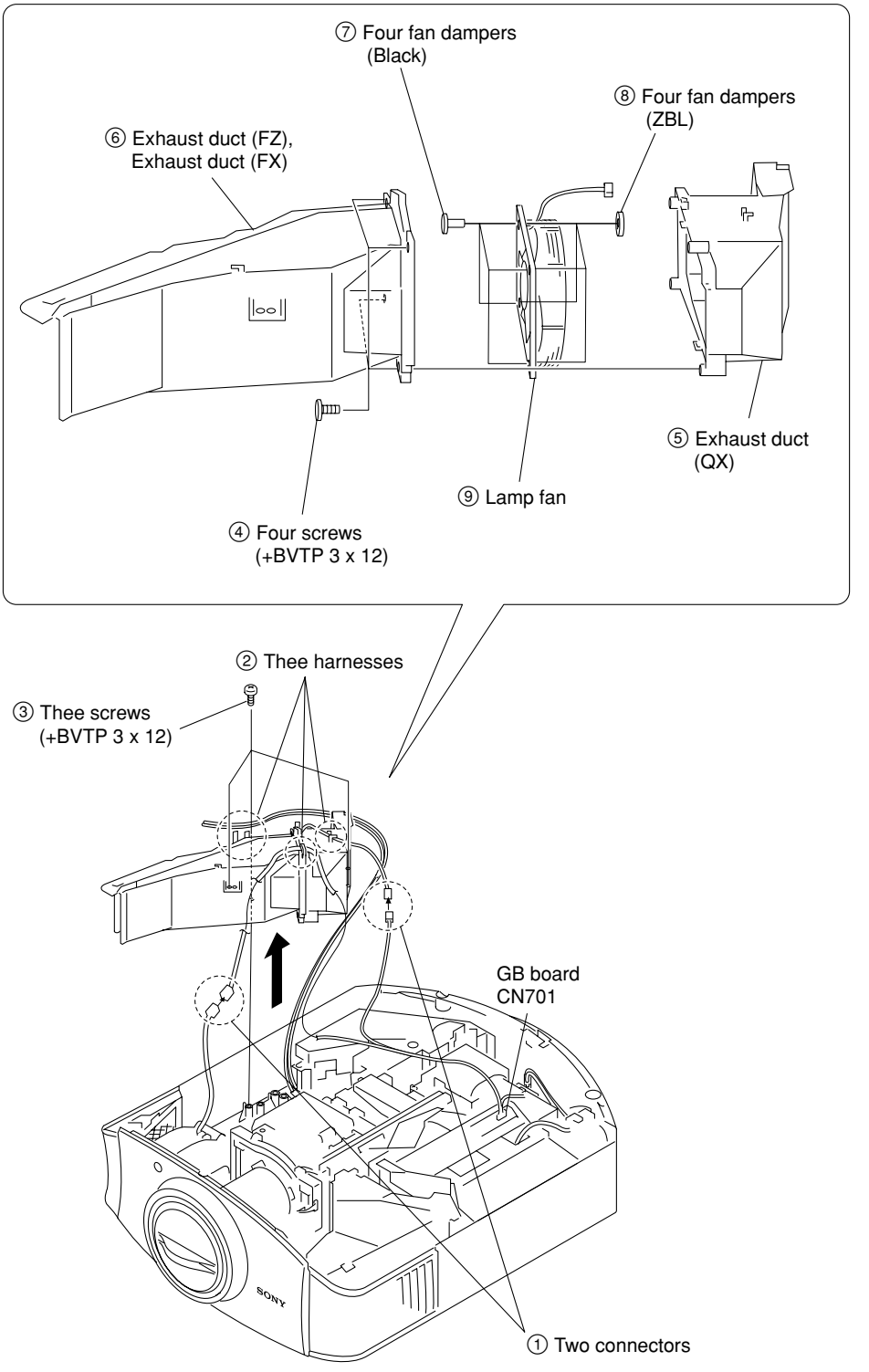
⑦ Four fan dampers
(Black)
⑧ Four fan dampers
(ZBL)
⑥ Exhaust duct (FZ),
Exhaust duct (FX)
⑤ Exhaust duct
(QX)
⑨ Lamp fan
④ Four screws
(+BVTP 3 x 12)
② Thee harnesses
③ Thee screws
(+BVTP 3 x 12)
GB board
CN701
① Two connectors

1-3-9. TA Board

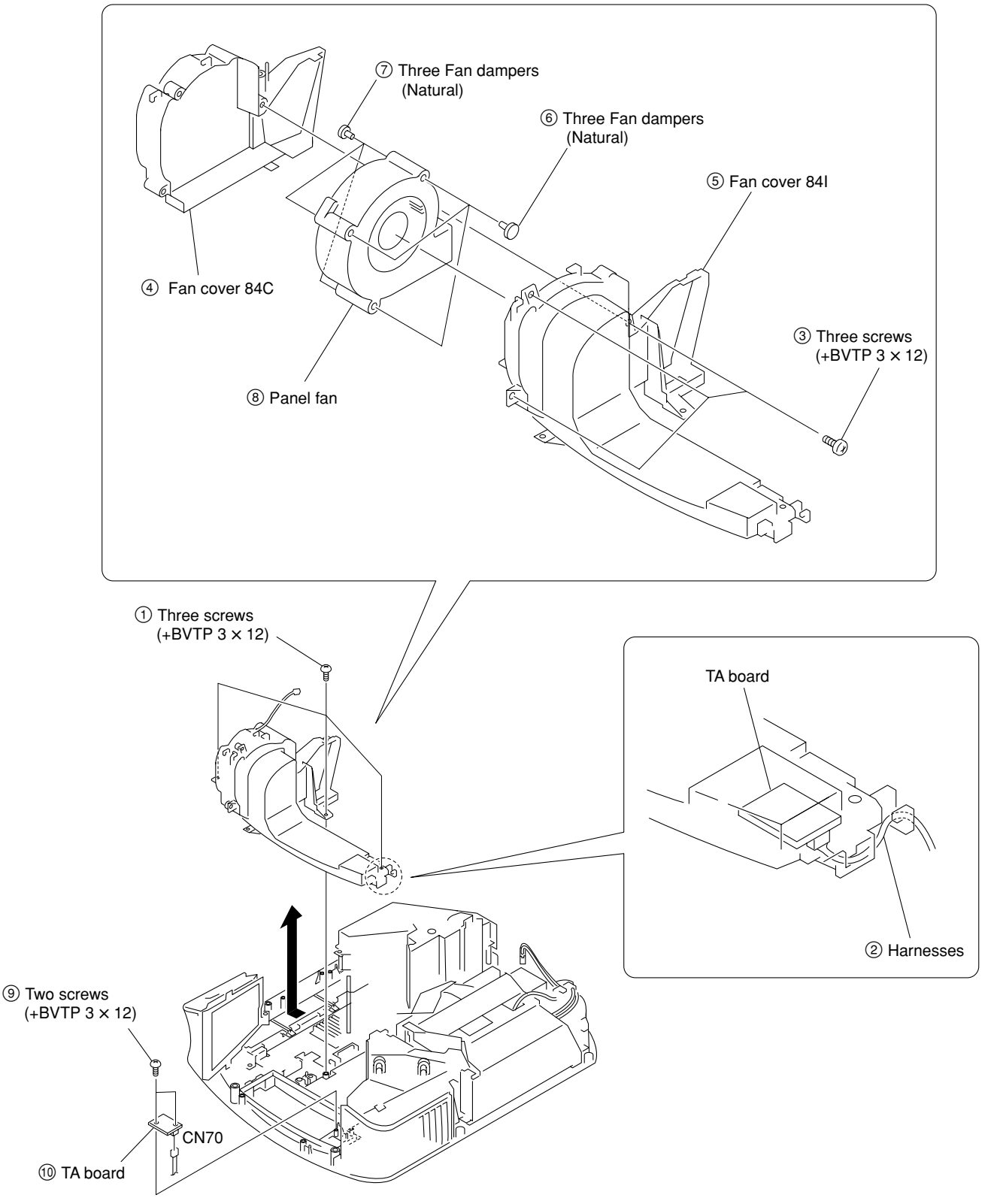
⑦ Three Fan dampers
(Natural)
⑥ Three Fan dampers
(Natural)
⑤ Fan cover 84I
④ Fan cover 84C
③ Three screws
(+BVTP 3 × 12)
⑧ Panel fan
① Three screws
(+BVTP 3 × 12)
TA board
② Harnesses
⑨ Two screws
(+BVTP 3 × 12)
CN70
⑩ TA board

1-3-10. Lamp Power Supply

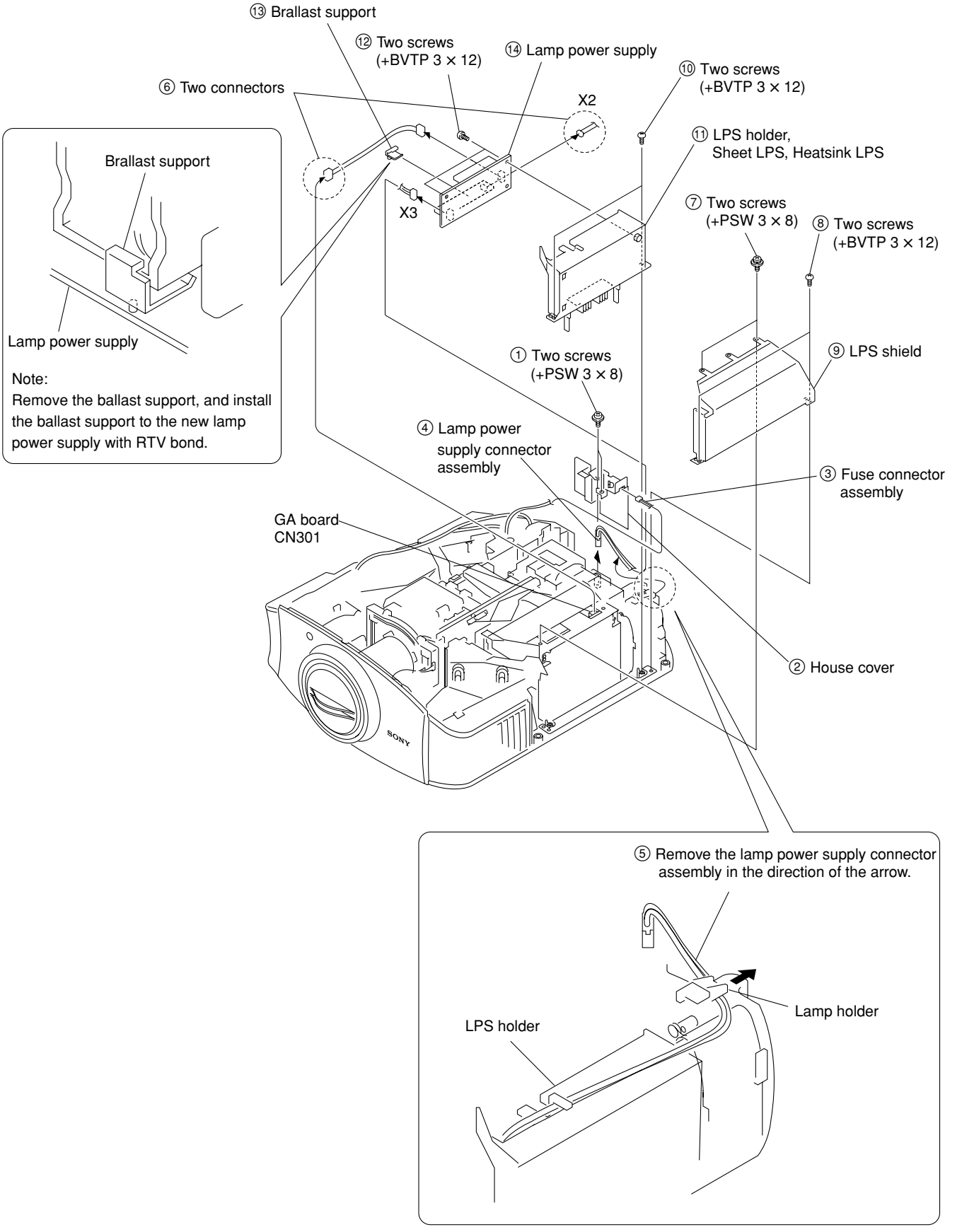

1-3-11. GA Board and GB Board-1

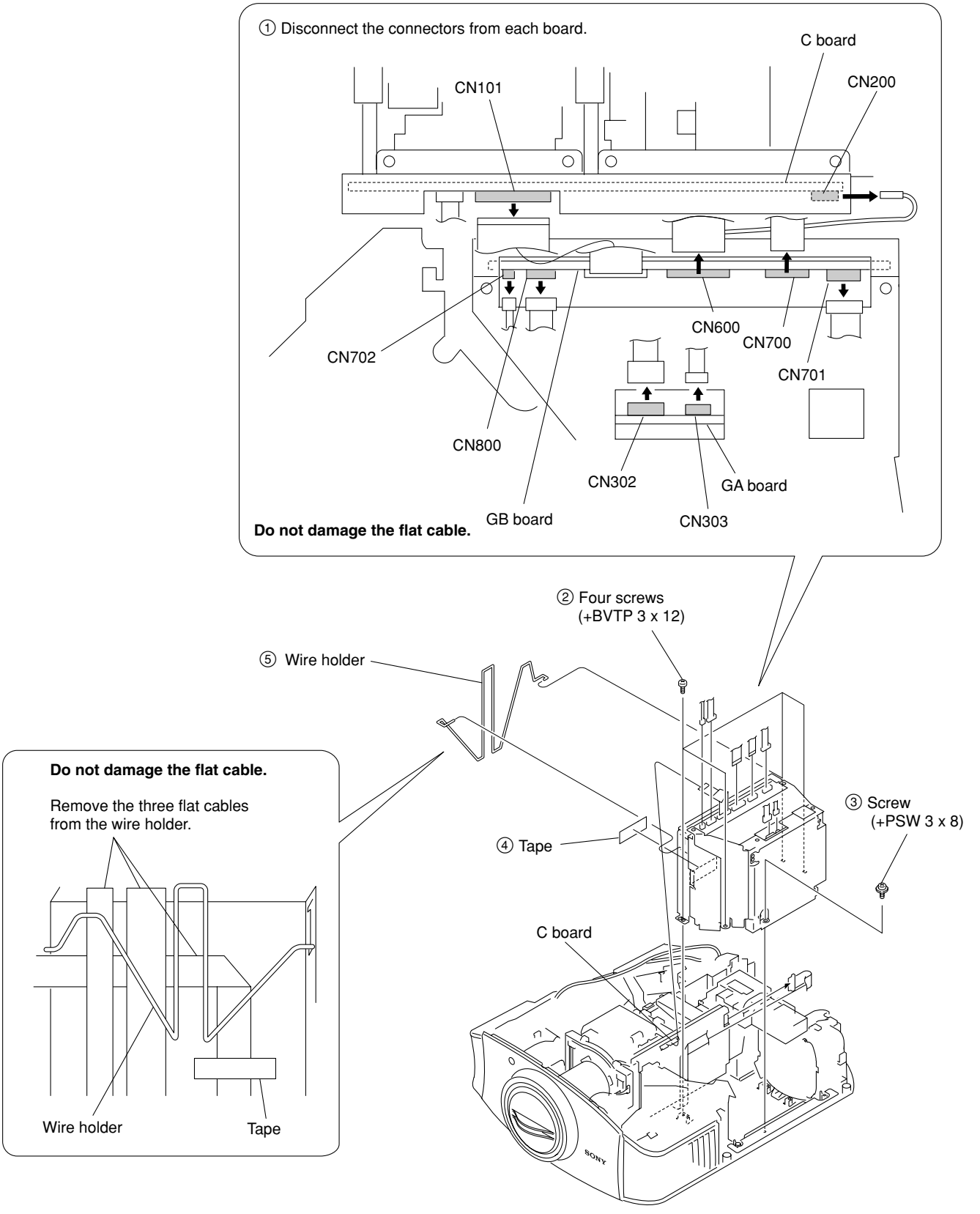

1-3-12. GA Board and GB Board-2

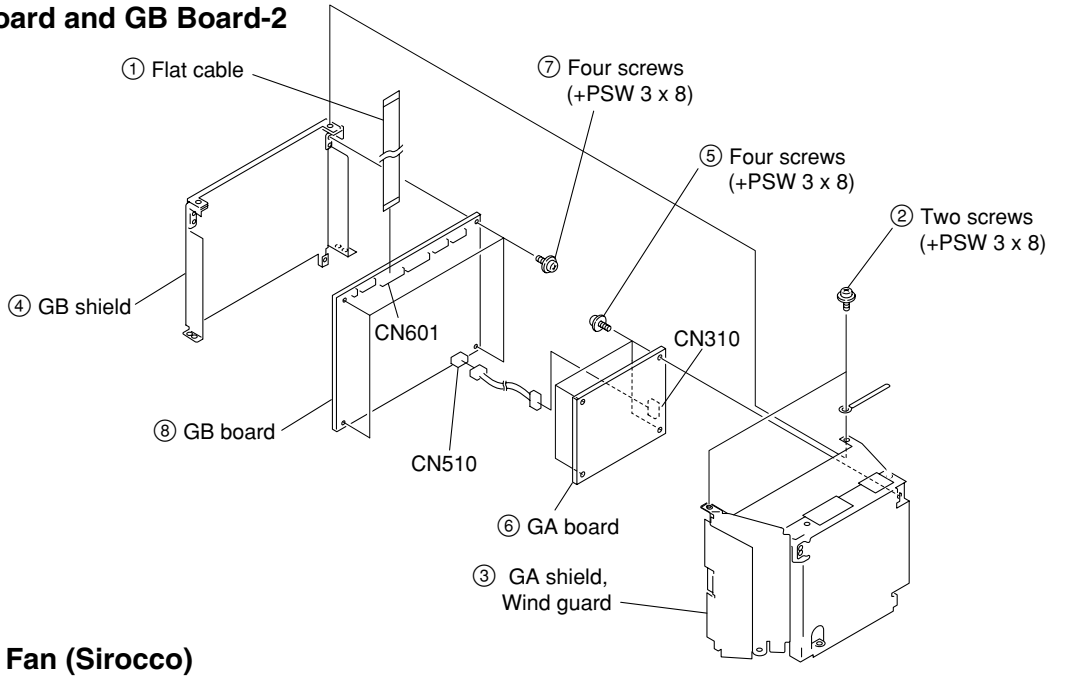

1-3-13. Lamp Fan (Sirocco)

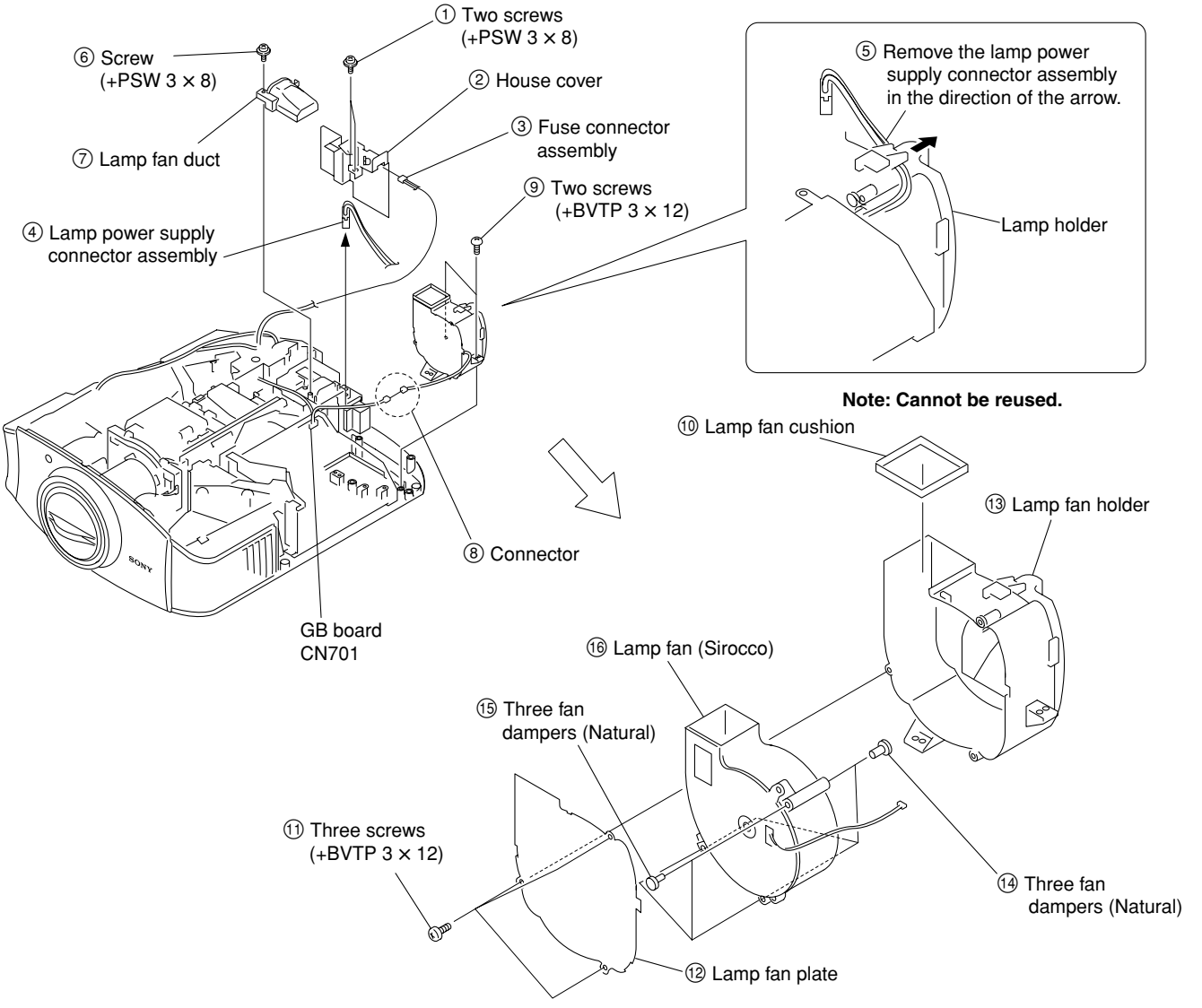

1-3-14. Louver (R)

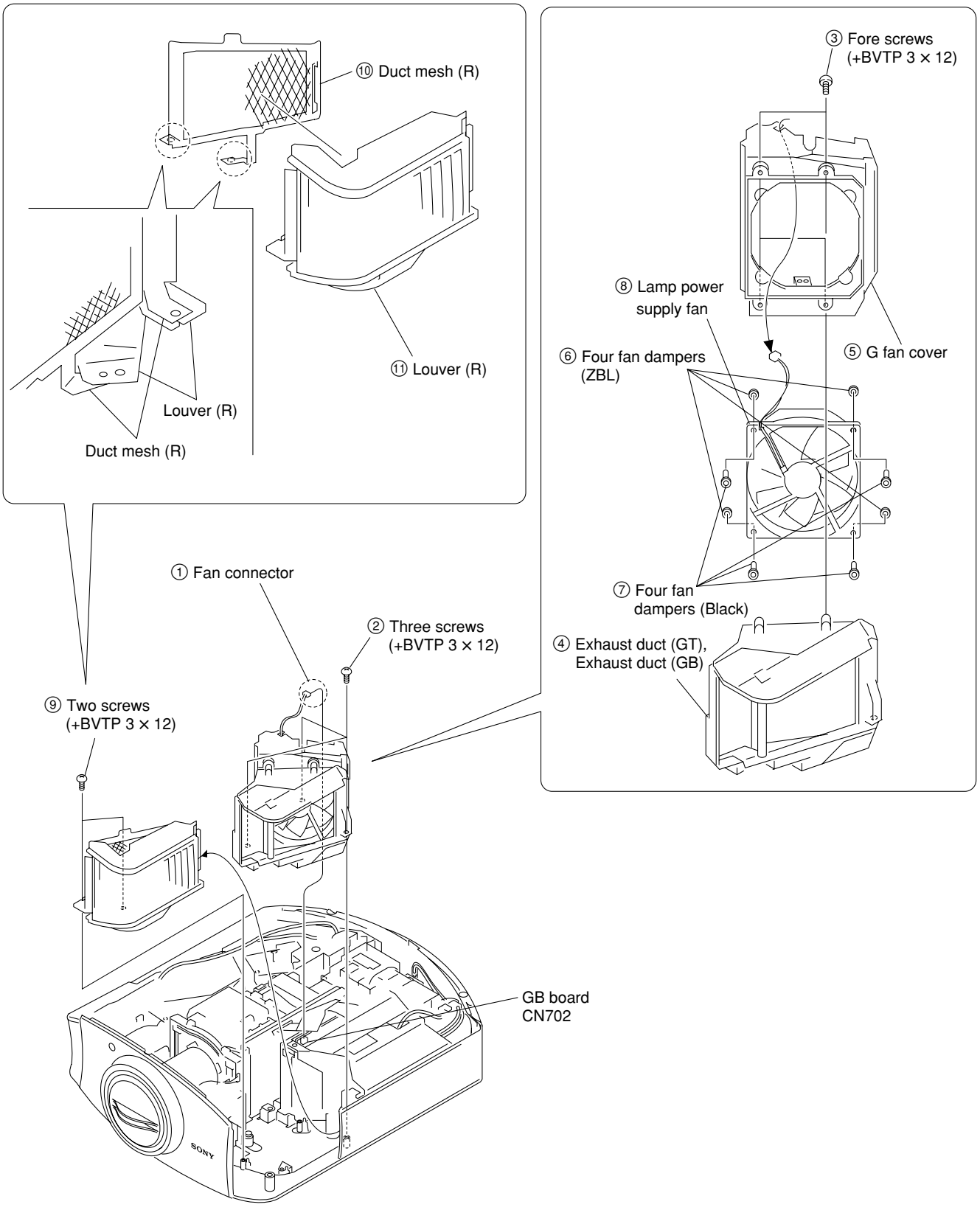

1-3-15. Q Board-1

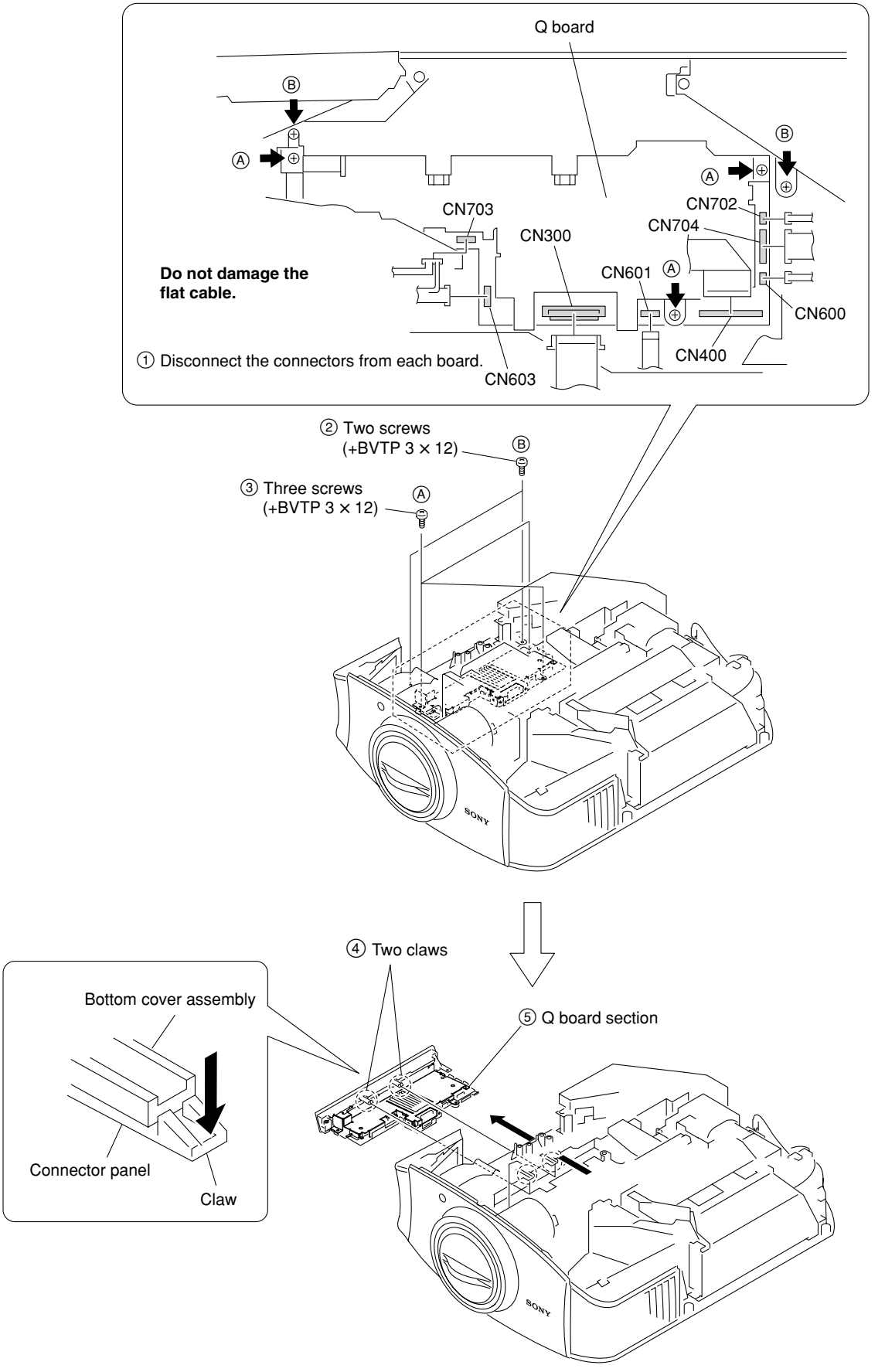

1-3-16. Q Board-2

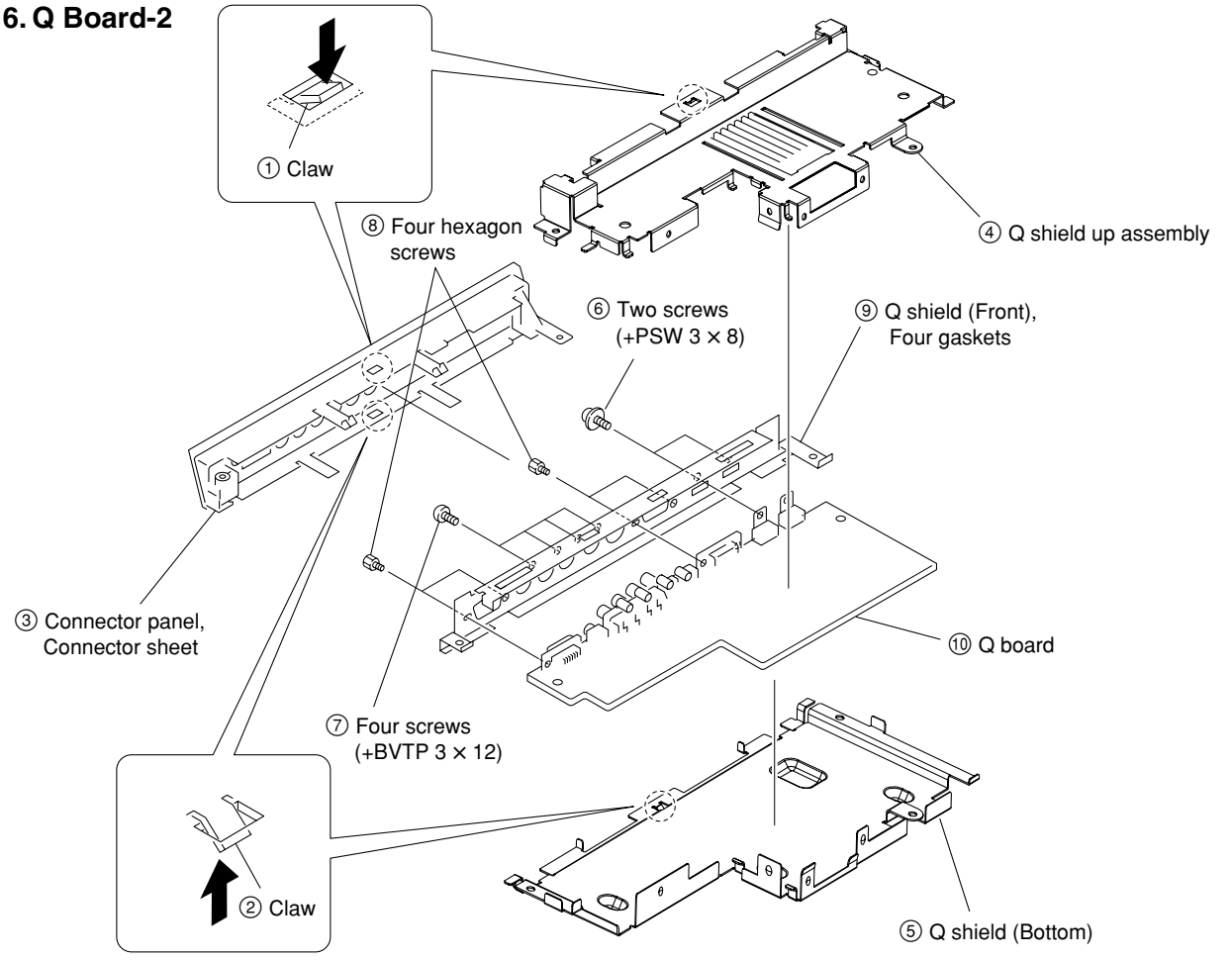

1-3-17. U Board

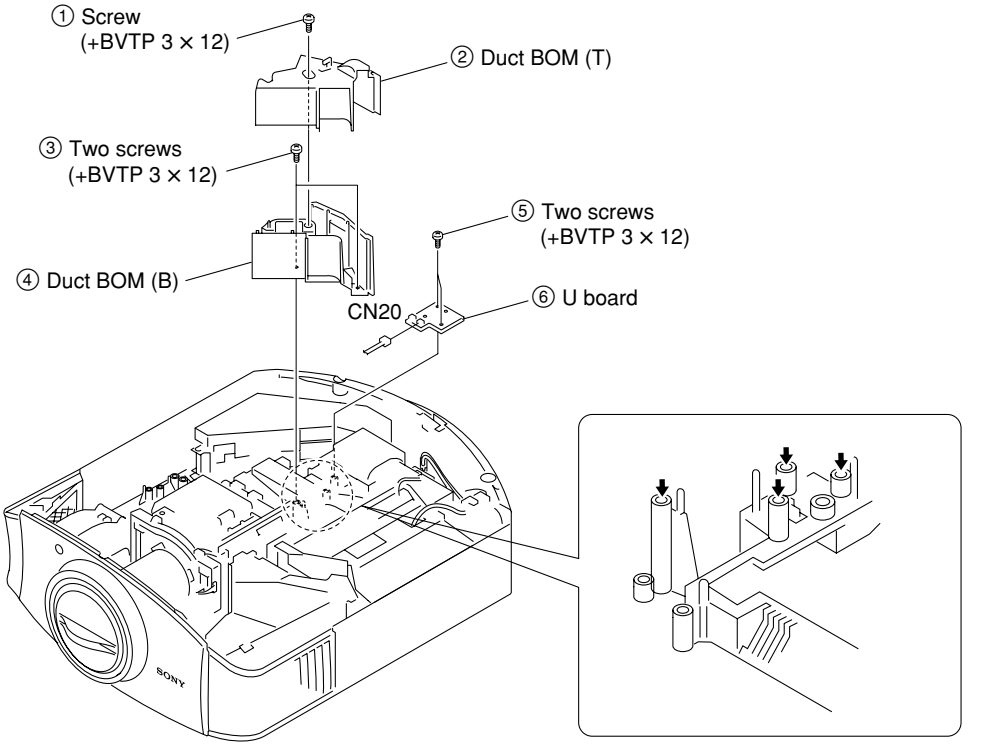

1-3-18. GS Board

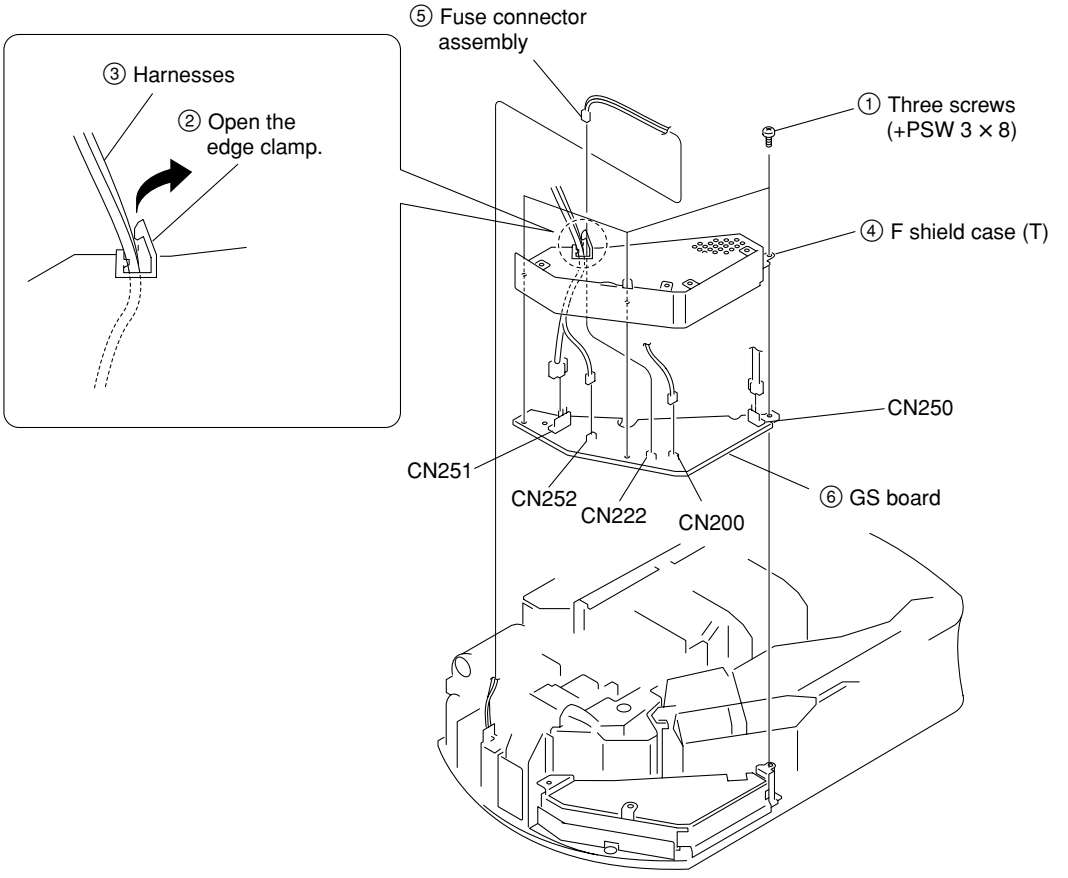

1-3-19. F Board

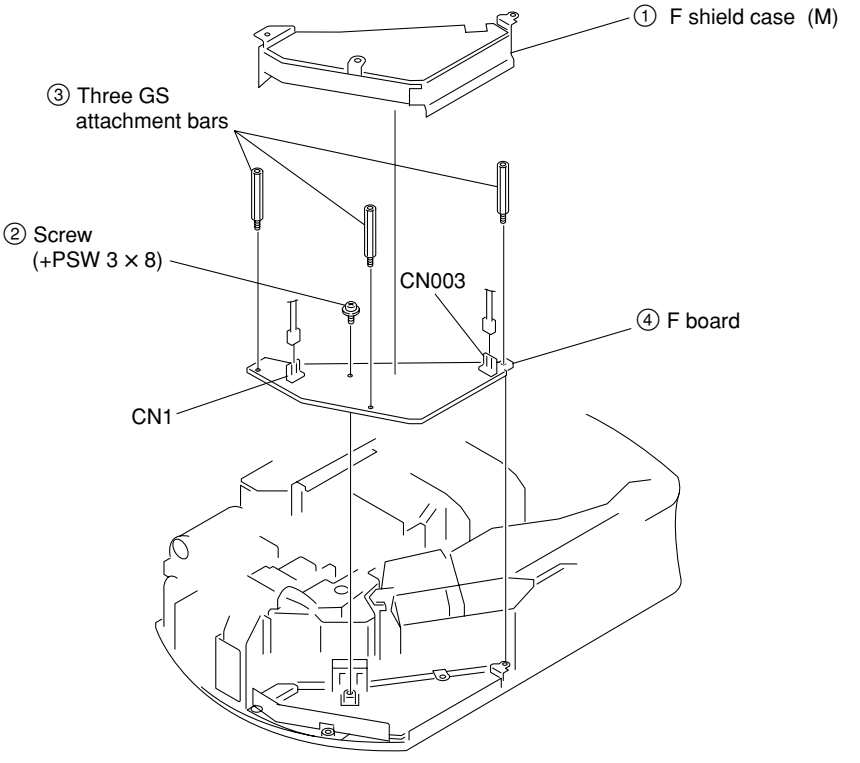

1-3-20. Extension Boards and Extension Cables

X kit assembly (Part No. A-1219-677-A)

XC board × 3

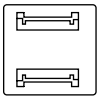

There are R, G, and B flat connector assemblies.

Ⓐ-1 Z18 Flat connector assembly (50P) (R)

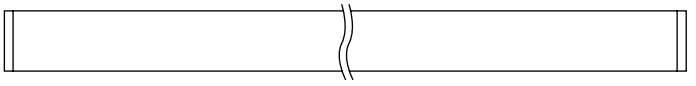

Ⓐ-2 Z19 Flat connector assembly (50P) (G)

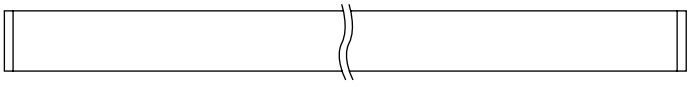

Ⓐ-3 Z20 Flat connector assembly (50P) (B)

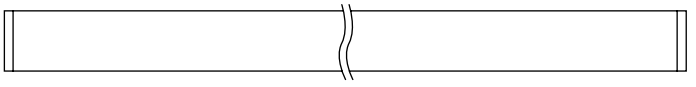

XQ board

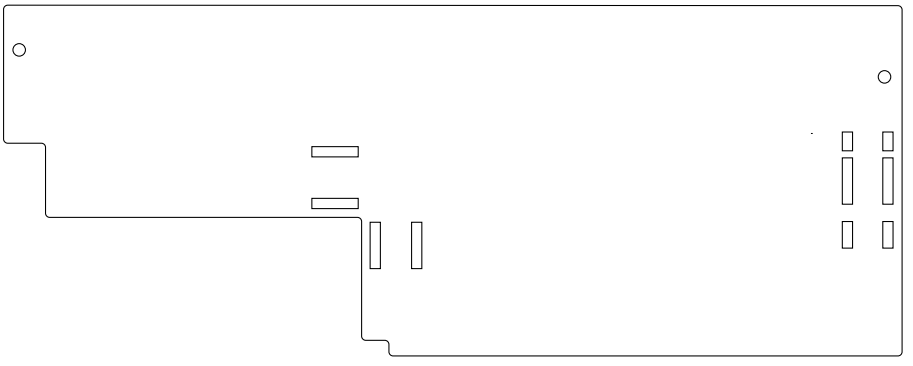

Ⓑ SH connector assembly (4P)

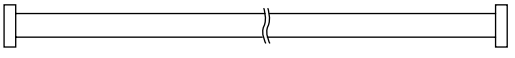

Ⓒ SH connector assembly (5P)

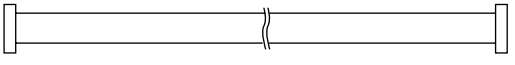

Ⓓ SH connector assembly (10P)

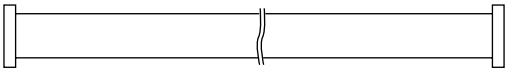

Ⓔ SH connector assembly (11P) × 2

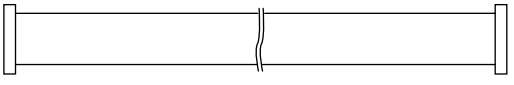

Ⓕ 0.5 Flat connector assembly (24P)

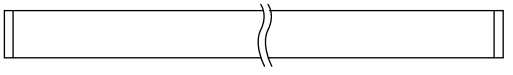

Ⓖ 1.0 Flat connector assembly (24P)

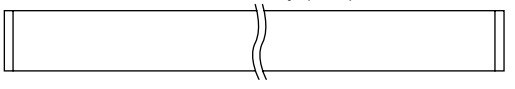

Ⓗ Flexible flat cable (38P)

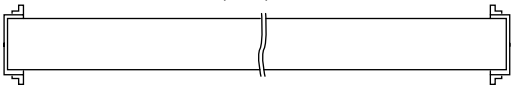

1-3-21. How to Extend Boards

1. C Board extension using XC extension boards.

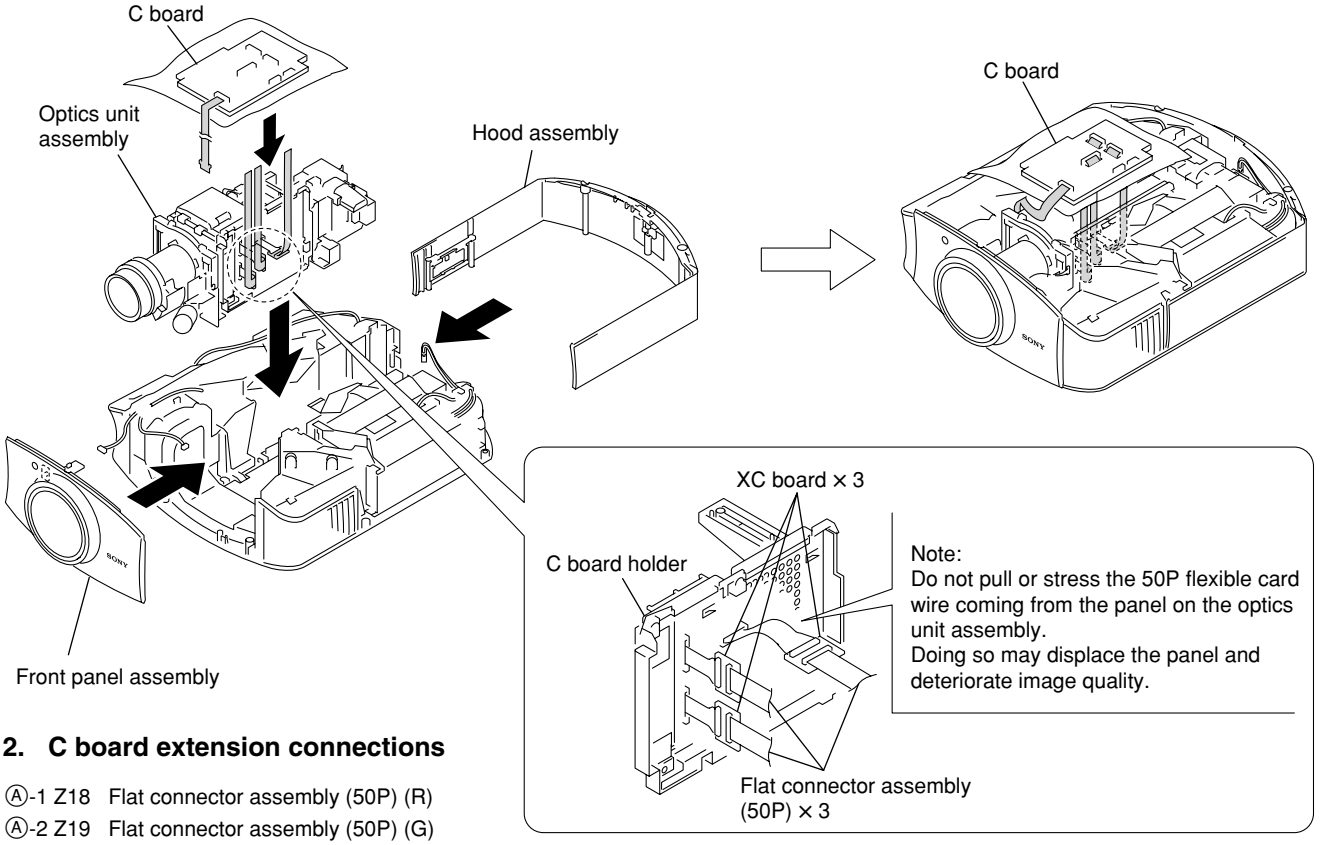

2. C board extension connections

Ⓐ-1 Z18 Flat connector assembly (50P) (R)
Ⓐ-2 Z19 Flat connector assembly (50P) (G)
Ⓐ-3 Z20 Flat connector assembly (50P) (B)
Ⓗ Flexible flat cable (38P)

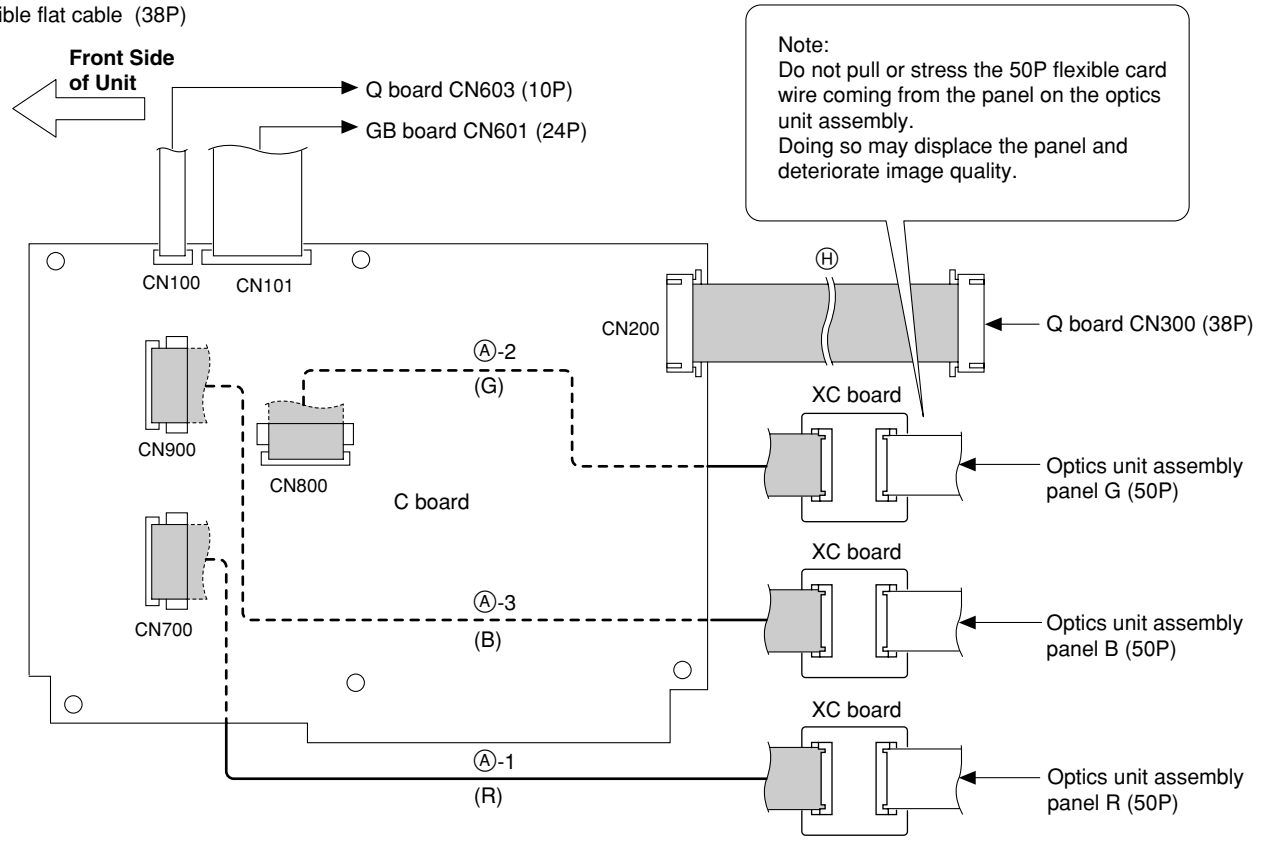

3. Q board extension using the XQ extension boards.

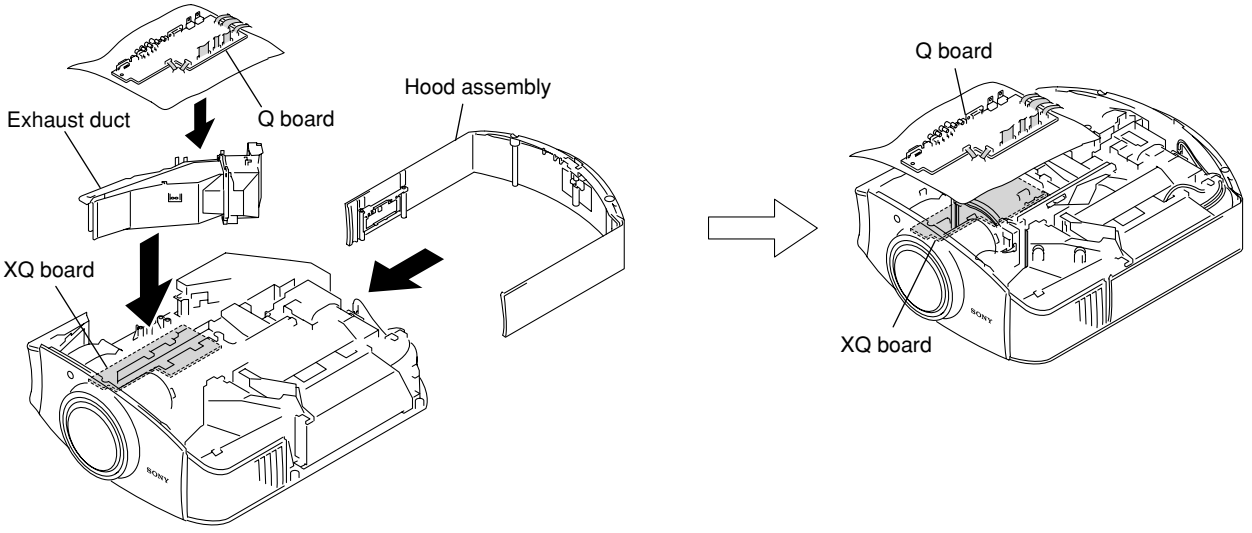

4. C Board extension connections

Ⓑ SH connector assembly (4P)
Ⓒ SH connector assembly (5P)
Ⓓ SH connector assembly (10P)
Ⓔ SH connector assembly (11P) × 2
Ⓕ 0.5 Flat connector assembly (24P)
Ⓖ 1.0 Flat connector assembly (24P)
Ⓗ Flexible flat cable (38P)

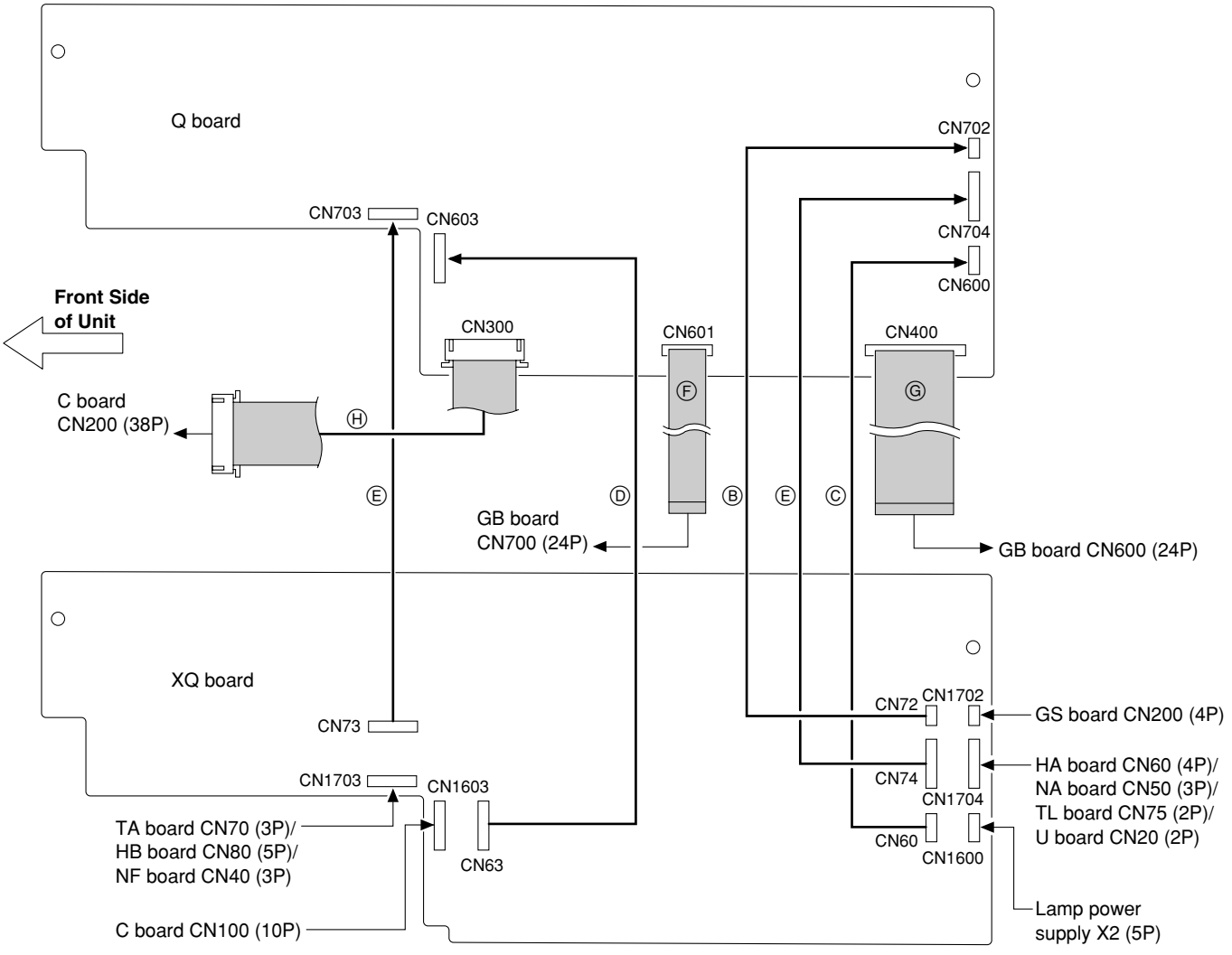

1-4. Unleaded Solder

Boards requiring use of unleaded solder are printed with a lead free mark (LF) indicating the solder contains no lead. (Caution: Some printed circuit boards may not come printed with the lead free mark due to their particular size.)

: LEAD FREE MARK

Notes

- Be sure to use the unleaded solder for the printed circuit board printed with the lead free mark.
- The unleaded solder melts at a temperature about 40 °C higher than the ordinary solder, therefore, it is recommended to use the soldering iron having a temperature regulator.
- The ordinary soldering iron can be used but the iron tip has to be applied to the solder joint for a slightly longer time. The printed pattern (copper foil) may peel away if the heated tip is applied for too long, so be careful.

1-5. Service Know-How

1-5-1. When the Optical Unit ASSY is Replaced

1. Write the Look Up Table/3D gamma data contained in the attached floppy disk.
   See "1-6. Writing Look Up Table/3D gamma/DDC data" for more about how to write data.
2. Perform white balance adjustment. (See "2-3. Servicing White Balance Adjustment")
3. Change the IRIS data to the values of the IRIS adjustment data stored in the supplied floppy disk. For how to change the data, refer to "1-5-3. IRIS Copy".

1-5-2. When the Board is Replaced

1) When the Q board is replaced
   a) Change the IRIS data to the values of the IRIS adjustment data before replacement. (For the method to change the IRIS data, refer to "1-5-3. IRIS Copy".)
   b) Change the W/B data to the values of the W/B adjustment data before replacement. (For the method to change the W/B data, refer to "1-5-4. W/B Copy".)
   When the adjustment data cannot be copied, adjust W/B. (Refer to "2-3. Servicing White Balance Adjustment".)

2) When the F, GA, or GS board is replaced
   No particular adjustments are needed.
3) When the GB board is replaced
   Remove IC700 from the old GB board, and install the removed IC700 to the new GB board that is supplied as the repair part, before replacement.
4) When the C board is replaced
   Remove IC301 and IC401 from the old C board and install them to the new C board that is supplied as the repair part, before replacement.

1-5-3. IRIS Copy

1. Enter the Service Mode. (Refer to "2-1-2. How to Enter the Service Mode".)
2. Set OTHER: 01 Iris Adj in the Device Menu to 1.
3. Change the value of OTHER: 02 Iris/Open_Reg.
4. Change the value of OTHER: 03 Iris/Close_Reg.
5. Return OTHER: 01 Iris Adj in the Device Menu to 0.
6. Perform Save to Memory.

1-5-4. W/B Copy

1. Input the 1080/60i flat-field (three RGB colors) to the component terminal.
2. Enter the Service Mode. (Refer to "2-1-2. How to Enter the Service Mode".)
3. Enter the W/B mode in the Device Menu.
4. Change the values of Gain R/G/B and Bias R/G/B in each mode (High/Middle/Low/User1/User2/User3).
5. Perform Save to Memory.
6. Input the computer signal to input A, and copy all the W/B adjustment values just as for Component.

∗ W/B data has a memory for each of the three IRIS modes (AUTO1/2, Manual, and OFF). Perform the above steps for each IRIS mode.

1-6. Upgrading the Software

1. SUB

(1) From the RS-232C terminal

1. Connect the PC to VW-50 with the RS-232C cross cable.
2. Double-click on “Flash.exe” to launch the application.
   Application name: Main Flash upgrader Ver1.04
   Filename: Flash.exe
3. Select the download information file, and specify the Main software to write.
   Selected file: qh3v102a.dil
4. Place the projector in standby state.
5. Click the [Start] button in the application.

   ∗ See Technical Memo DPPJ04-040 for more details.

2. Scan Converter

(1) From the RS-232C terminal

1. Connect the PC to VW-50 with the RS-232C cross cable.
2. Place the projector in standby state.
3. Start the upgrade application (double-click on “FlashUpgraderForSony3.4.exe”) for the scan converter (Pixelworks).
   Application name: Pixelworks ImageProcessor SDK FlashUpgrader
   Filename: FlashUpgraderForSony3.4.exe
   <Writing the software to scan converter>

4. Set the COM Port and switch the baud rate to 115200.
5. Click the [choose...] button in the application and select the file to write (“pwOp104b.inf”).
6. Click on [Ext_232C PW_1] in the application.
7. Click the [Flash] button in the application.
8. Click the [Close] button to end the application.

   ∗ See Technical Memo DPPJ03-064 for more details.

3. Writing Look Up Table/3D gamma/DDC data

Use the dedicated application “Quick Access” for writing the data.
Application name: 3Dgamma Quick Access
Filename: QuickAccess.exe
Version: 6.8 or later

1. Connect the PC to VW50 with the RS-232C cross cable.
2. Turn the power on to the projector.
3. Double-click on “QuickAccess.exe” to launch the application.
4. Select “VPL-VW50” from the [Model] pull-down menu.
5. Select “Load” from the [Load/Save] pull-down menu.
6. Select the data type (3D gamma/Look Up Table/DDC) from the [3dgm/Lut] pull-down menu.
7. Click on [Next].
8. Press the [Browser] button and specify the file to write.
9. Click on [Next].
10. Set the COM Port and switch the baud rate to 38400.
11. Click on [Next].
12. When the dialog box appears prompting your confirmation, click on [OK].
13. Writing has finished when “Completed.” appears.
14. Click on [End].

    ∗ See Technical Memo DPPJ04-044R for more details.

1-7. Memory

Memory structure consists of the following memory blocks.

1. Set memory
2. Status memory
3. Video memory
4. W/B memory
5. Channel memory
6. Installation memory
7. Picture memory
8. RCP memory
9. Fan memory

External NVM : 16Kbyte, 256kbyte EEPROM

When the power is turned on to the projector, all data inside the internal ROM are written into the NVM (Non-volatile Memory).
When the power is turned to on to the projector, required data for the current picture, such as status memory data, etc., are selected from the respective memory blocks, and are written into the internal RAM. When adjustment is carried out, adjustment data are written into the NVM automatically (items on the user mode) or by the trigger of memory operation (items on the service mode), then stored them. Be careful that the factory preset (adjusted) data of the user adjustable items are all eliminated from the memory when user performs adjustment of the adjustable items (W/B and Device Adjust) and the memory operation to memorize the user adjustment data into the NVM.

∗ When the power to the projector is turned off without memorizing the adjustment data, the original factory preset (adjusted) data can be restored by removing the power cord once and connect it back again.

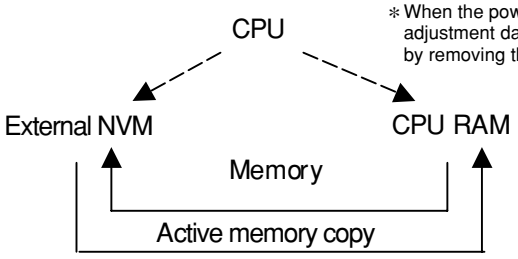

Set Memory

Status Memory	No.01
	No.02
	No.03
	No.04
	...
	No.99

Set Memory

Status Memory		No.01
		No.02
	Input-A Preset	No.03
		No.04
		...
		No.99
	Input-A User	No.101
		...
		No.120
	Component Preset	No.03
		No.04
		...
		No.99
	HDMI1 Preset	No.03
		No.04
		...
		No.99
	HDMI2 Preset	No.03
		No.04
		...
		No.99

Set Memory

Status Memory

Video Chroma Memory	Noinput
	NTSC3.58
	NTSC4.43
	PAL
	PALM
	PALN
	SECAM
	BW60
	BW50
	PAL60

Video Chroma Memory	Noinput
	NTSC3.58
	NTSC4.43
	PAL
	PALM
	PALN
	SECAM
	BW60
	BW50
	PAL60

Video Chroma Memory

W/B Memory	Iris:Off	Computer	High
			Middle
			Low
			Custom1
			Custom2
			Custom3
		Others	High
			Middle
			Low
			Custom1
			Custom2
			Custom3
	Iris:On	Computer	High
			Middle
			Low
			Custom1
			Custom2
			Custom3
		Others	High
			Middle
			Low
			Custom1
			Custom2
			Custom3
	Iris:Auto	Computer	High
			Middle
			Low
			Custom1
			Custom2
			Custom3
		Others	High
			Middle
			Low
			Custom1
			Custom2
			Custom3

W/B Memory	Iris:Off	Computer	High
			Middle
			Low
			Custom1
			Custom2
			Custom3
		Others	High
			Middle
			Low
			Custom1
			Custom2
			Custom3
	Iris:On	Computer	High
			Middle
			Low
			Custom1
			Custom2
			Custom3
		Others	High
			Middle
			Low
			Custom1
			Custom2
			Custom3
	Iris:Auto	Computer	High
			Middle
			Low
			Custom1
			Custom2
			Custom3
		Others	High
			Middle
			Low
			Custom1
			Custom2
			Custom3

W/B Memory	High
	Middle
	Low
	Custom 1
	Custom 2
	Custom 3

Channel Memory	Video
	S Video
	Input-A
	Component
	HDMI 1
	HDMI 2

Channel Memory	Video
	S Video
	Input-A
	Component
	HDMI 1
	HDMI 2

Channel Memory

Installation Memory	Up/Down inversion possible
	Up/Down inversion impossible

Installation Memory	Up/Down inversion possible
	Up/Down inversion impossible

Installation Memory

Picture Memory	All Input Channel	Dynamic Standard Cinema User1 User2 User3

Picture Memory	Video	Dynamic Standard Cinema User1 User2 User3
	S Video	Dynamic Standard Cinema User1 User2 User3
	Input-A	Dynamic Standard Cinema User1 User2 User3
	Component	Dynamic Standard Cinema User1 User2 User3
	HDMI 1	Dynamic Standard Cinema User1 User2 User3
	HDMI 2	Dynamic Standard Cinema User1 User2 User3

Picture Memory

RCP Memory	User1 User2 User3

RCP Memory	User1 User2 User3

RCP Memory

FAN Memory

FAN Memory

FAN Memory

1-8. Warning on Power Connection

Use a proper power cord for your local power supply.

	The United States, Canada		Continental Europe	UK, Ireland, Australia, New Zealand	Japan
Plug type	VM0233	YP-3	YP-12A	*	YP-359
Female end	VM0089	YC-13	YC-13D	VM0303B	YC-13
Cord type	SVT	SVT	H05VV-F	CEE (13) 53 rd (OC)	VCTF
Rated Voltage & Current	10A/125V	10A/125V	10A/250V	10A/250V	12A/125V
Safety approval	UL/CSA	UL/CSA	VDE	VDE	DENANHO

* Use a rated plug that complies with the regulation of each country/region and the specifications.

Section 2
Electrical Adjustments

2-1. Preparations

2-1-1. Required Equipment

- Oscilloscope
  Tektronix 2465 or equivalent
  (bandwidth: 350 MHz or more)
- NTSC, PAL, SECAM component signal generator
  Tektronix TG2000 +AVG1 (optional module) +AWVG1 (optional module) or equivalent
- VG (Programmable video signal generator)
  VG854 or equivalent
- Digital voltmeter
  Advantest TR6845 or equivalent
- Luminance meter
- Chrominance difference gauge

Note

Perform the following adjustments at least 5 minutes after turning on the power.

2-1-2. Service Mode Setting

1. Set the “Screen” of "Preferences” to “On” in the MENU.
2. MENU is erased.
3. Press the keys in the following order:
   “ENTER”→“ENTER”→“LEFT” →“ENTER”
4. The message “Do you wish to enter into the SERVICE MODE? Yes No” will be displayed.
5. Select “Yes”.

Note

When leaving the FACTORY MODE, perform item 3. “Do you wish to return to the USER MODE? Yes No” will be displayed. Select “Yes”.

- Note that when the items (W/B, Device Adjust) that can be adjusted in the Factory mode are adjusted and stored in memory, they are saved in NVM and the factory default data will be lost. Be sure to perform "Save to memory" after entering and exiting the Gamma adjustment mode. If the values are changed in the Gamma adjustment mode and the original values cannot be restored, turn off the power to the unit and turn it on again. The UF data does not change even if the mode for Advanced Iris in Cinema Black Pro in Picture Adjust is changed without performing "Save to memory". When "Save to memory" is performed at that time, the UF data of each Iris mode will be overwritten and lost.

2-2. Adjustment Item Initialize Data

MenuTitle	ItemName	MemoryName																											Re-marks
		Set Memory	ColSys Memory	Status Memory	Picture Memory				Channel Memory						RCP Memory		W/B Memory												
					All input ch.												Computer						Others						
					Dynamic	Standard	Cinema	User1 to 3	Video	S Video	Input-A	Component	HDMI1	HDMI2	Off	User1 to 3	High	Middle	Low	Custom1	Custom2	Custom3	High	Middle	Low	Custom1	Custom2	Custom3	
Picture	Picture Mode			CINEMA																									
	Reset																												
	CinemaBlackPro																												
	Advanced Iris				Off	Auto1	Auto1	Auto1																					
	Sensitivity(Auto1)				RECOMMEND	RECOMMEND	RECOMMEND	RECOMMEND																					
	Sensitivity(Auto2)				RECOMMEND	RECOMMEND	RECOMMEND	RECOMMEND																					
	Mannual				50	50	50	50																					
	lamp Control				HIGH	HIGH	HIGH	HIGH																					
	Contrast				90	80	80	80																					
	Brightness				40	50	50	50																					
	Color				55	50	50	50																					
	Hue				50	50	50	50																					
	Color Temp.				HIGH	MIDDLE	LOW	LOW																					
	Custom1																												
	Gain R	0																											
	G	30																											
	B	0																											
	Bias R	0																											
	G	0																											
	B	0																											
	Custom2																												
	Gain R	0																											
	G	0																											
	B	0																											
	Bias R	0																											
	G	0																											
	B	0																											
	Custom3																												
	Gain R	0																											
	G	0																											
	B	0																											
	Bias R	0																											
	G	0																											
	B	0																											
	Sharpness				50	50	50	50																					
	NR				OFF	OFF	OFF	OFF																					
	DDE				FILM	FILM	FILM	FILM																					
	Black Level Adj.				OFF	OFF	OFF	OFF																					
	Gamma Correction				OFF	OFF	OFF	OFF																					
Advanced Picture	RCP	OFF																											
	Color Select															Red													
	Position															0													
	Range															60													
	Color															0													
	Hue															0													
	Color Space	WIDE																											
Screen	Wide Mode(SD)	FULL																											
	Wide Mode(HD)	FULL																											
	Wide Mode(PC)	FULL_1																											
	Over Scan			※1																									
	Screen Area	FULL																											
	V Center(Zoom)								0	0	0	0	0	0															
	V Size(Zoom)								0	0	0	0	0	0															
	Adjust Signal																												
	APA																												
	Dot Phase			※1																									
	H Size			※1																									
	Shift			※1																									
Setup	Status	ON																											
	Language	ENGLISH																											
	Cooling Setting	Standard																											
	Standby Mode	Standard																											
	Power Saving	OFF																											
	Input-A Signal Sel.	AUTO																											
	Color System		AUTO																										
	Lamp Setting																												

MenuTitle	ItemName	MemoryName																												Re-marks
		Set Memory	ColSys Memory	Status Memory	Picture Memory				Channel Memory						RCP Memory		W/B Memory													
					All input ch.												Computer						Others							
					Dynamic	Standard	Cinema	User1 to 3	Video	S Video	Input-A	Component	HDMI1	HDMI2	Off	User1 to 3	High	Middle	Low	Custom1	Custom2	Custom3	High	Middle	Low	Custom1	Custom2	Custom3	
Function	Auto Input Search	OFF																												
	Test Pattern	ON																												
	Background	BLUE																												
Installation	V Keystone	0																												
	Image Flip	OFF																												
	Lens Control	ON																												
	IR Receiver	Front&Rear																												
	Blanking																													
	Top	0																												
	Bottom	0																												
	Left	0																												
	Right	0																												
Information	fH	Display only																												
	fV	Display only																												
	(Memory No.)	Display only																												
	(Resolution)	Display only																												
	ROM Version	Display only																												
	SC ROM Version	Display only																												
	Lamp Timer	Display only																												
	Operation Timer	Display only																												
	Prev. Lamp Timer	Display only																												
W/B Iris:Off	Gain R																128	128	128	128	128	128	128	128	128	128	128	128		
	G																128	128	128	128	128	128	128	128	128	128	128	128		
	B																128	128	128	128	128	128	128	128	128	128	128	128		
	Bias R																128	128	128	128	128	128	128	128	128	128	128	128		
	G																128	128	128	128	128	128	128	128	128	128	128	128		
	B																128	128	128	128	128	128	128	128	128	128	128	128		
W/B Iris:On	Gain R																128	128	128	128	128	128	128	128	128	128	128	128		
	G																128	128	128	128	128	128	128	128	128	128	128	128		
	B																128	128	128	128	128	128	128	128	128	128	128	128		
	Bias R																128	128	128	128	128	128	128	128	128	128	128	128		
	G																128	128	128	128	128	128	128	128	128	128	128	128		
	B																128	128	128	128	128	128	128	128	128	128	128	128		
W/B Iris:Auto	Gain R																128	128	128	128	128	128	128	128	128	128	128	128		
	G																128	128	128	128	128	128	128	128	128	128	128	128		
	B																128	128	128	128	128	128	128	128	128	128	128	128		
	Bias R																128	128	128	128	128	128	128	128	128	128	128	128		
	G																128	128	128	128	128	128	128	128	128	128	128	128		
	B																128	128	128	128	128	128	128	128	128	128	128	128		

∗1: “Phase・Pitch・Shift H/V・Over Scan” in the “Adjust Signal” menu have an initial value respectively in accordance with the input signal (PRESET MEMORY No.).

Note

There are nonadjustable items in accordance with the input signal.

DeviceName	ItemName		MemoryName																														
			Set Memory	Status Memory	videoChroma																				Channel Memory						Inst Memory		No Memory
					Video										SVideo																		
					Noinput	NTSC3.58	NTSC4.43	PAL	PALM	PALN	SECAM	BW60	BW50	PAL60	Noinput	NTSC3.58	NTSC4.43	PAL	PALM	PALN	SECAM	BW60	BW50	PAL60	Video	S Video	Input-A	Component	HDMI1	HDMI2	Up/Down inversion possible	Up/Down inversion impossible	
A/D Converter	ADC/	R Gain(Other)																							32	32	176	-	-	-			
		R Gain(VideoGBR)																							-	-	176	-	-	-			
		R Gain(Component 15k)																							-	-	176	176	-	-			
		R Gain(Component 30k)																							-	-	176	176	-	-			
		R Gain(Component HD)																							-	-	176	176	-	-			
		G Gain(Other)																							32	32	176	-	-	-			
		G Gain(VideoGBR)																							-	-	176	-	-	-			
		G Gain(Component 15k)																							-	-	176	176	-	-			
		G Gain(Component 30k)																							-	-	176	176	-	-			
		G Gain(Component HD)																							-	-	176	176	-	-			
		B Gain(Other)																							32	32	176	-	-	-			
		B Gain(VideoGBR)																							-	-	176	-	-	-			
		B Gain(Component 15k)																							-	-	176	176	-	-			
		B Gain(Component 30k)																							-	-	176	176	-	-			
		B Gain(Component HD)																							-	-	176	176	-	-			
		R Offset(Other)																							16	128	16	-	-	-			
		R Offset(VideoGBR)																							-	-	16	-	-	-			
		R Offset(Component 15k)																							-	-	128	128	-	-			
		R Offset(Component 30k)																							-	-	128	128	-	-			
		R Offset(Component HD)																							-	-	128	128	-	-			
		G Offset(Other)																							16	16	16	-	-	-			
		G Offset(VideoGBR)																							-	-	16	-	-	-			
		G Offset(Component 15k)																							-	-	16	16	-	-			
		G Offset(Component 30k)																							-	-	16	16	-	-			
		G Offset(Component HD)																							-	-	16	16	-	-			
		B Offset(Other)																							16	128	16	-	-	-			
		B Offset(VideoGBR)																							-	-	16	-	-	-			
		B Offset(Component 15k)																							-	-	128	128	-	-			
		B Offset(Component 30k)																							-	-	128	128	-	-			
		B Offset(Component HD)																							-	-	128	128	-	-			
	SS/	SonG Bias Current	1																														
		SonG Hysterisis	1																														
		SonG Thresh	1																														
		Video Pos Thresh	1																														
		Video Bias Current	1																														
		Video Hysterisis	1																														
		Video Thresh	1																														
		VS Pol Gain	0																														
		HS Pol Gain	0																														
		Back VS Pol Gain	0																														
		Back HS Pol Gain	0																														
		VS Sep Sel	0																														
		HACCU	0																														
		HINA Thresh	1																														
		HINA Hysterisis	1																														
C.Dec	C.Dec	Entry Den	0x21																														
		Entry Num	0x10																														
		Exit Den	0x1c																														
		Exit Num	0x10																														
		CB Max Offset			9	9	9	9	9	9	0	9	9	9	9	9	9	9	9	9	0	9	9	9									
		Secam H Cent	33/33(Video/Svideo)																														
		CV H Cent	15																														
		CV Y Delay			6	6	6	6	6	6	6	6	6	6	6	6	6	6	6	6	6	6	6	6									
		CV CB Pos			2	2	2	5	5	5	0	2	1	5	2	2	2	5	5	5	0	2	1	5									
		S H Cent	11																														
		S Y Delay			6	6	6	6	6	6	6	6	6	6	6	6	6	6	6	6	6	6	6	6									
		S CB Pos			2	2	2	5	5	5	5	6	5	5	2	2	2	5	5	5	5	6	5	5									
		Video Color	256(NoInput+CololSystem(9))																														
		Video Bright	16(NoInput+CololSystem(9))																														
		Killer Lev			64	64	64	64	80	64	34	64	64	64	64	64	64	64	80	64	34	64	64	64									
		Killer Lev BW	36/36(Video/Svideo)																														

DeviceName	ItemName		MemoryName																														
			Set Memory	Status Memory	videoChroma																			Channel Memory						Inst Memory		No Memory
					Video										SVideo																		
					Noinput	NTSC3.58	NTSC4.43	PAL	PALM	PALN	SECAM	BW60	BW50	PAL60	Noinput	NTSC3.58	NTSC4.43	PAL	PALM	PALN	SECAM	BW60	BW50	PAL60	Video	S Video	Input-A	Component	HDMI1	HDMI2	Up/Down inversion possible	Up/Down inversion impossible	
Panel Driver	P.Drv	Gain_R	85																														
		Gain_G	85																														
		Gain_B	85																														
		V Common R																													112	112	
		V Common G																													112	112	
		V Common B																													112	112	
Display Engine	DE/	LUT SW	0																														
		UF SW	1																														
Other	Iris/	Adj	-																														
		Open Reg	0																														
		Close Reg	1023																														
		Open Hall	Displya only																														
		Close Hall	Displya only																														
	Other/	Synchronous	1																														
		Pattern Enb																															Enable
		Pattern1																															
		Pattern2																															
		Pattern3																															

Note

There are nonadjustable items in accordance with the input signal.

2-3. White Balance Adjustment on Servicing

2-3-1. Component

Preparation

Set Picture Mode to “Standard” and make the following settings.
Contrast: 80
Bright: 50
Color: 50
Hue: 50
Sharpness: 50
NR: OFF
Black Level Adjust: OFF
Gamma Correction: OFF
Advanced Iris: OFF

Set each GAIN and each BIAS for RGB to 128.
Bring the ZOOM position of the lens to the center.

Adjustment

High

Set Color Temp to “High”.
Input 1080/60i 20 IRE flat field (RGB 3 color) into the component terminal and adjust R for white balance and BIAS for G until the chromaticity (x20, y20) is at the standard value.

(x20, y20) = (0.284 ±0.002, 0.298 ±0.002)

Input 1080/60i 80 IRE flat field (RGB 3 color) into the component terminal and adjust B for white balance and GAIN for G until the chromaticity (x80, y80) is at the standard value.

(x80, y80) = (0.284 ±0.002, 0.298 ±0.002)

Continue adjusting 80 IRE and 20 IRE until they reach standard values.

∗ If the BIAS value for B falls below 90, redo the adjustments using G and B.

Save the adjusted values

Middle

Set Color Temp to “Middle”.
Input 1080/60i 20 IRE flat field (RGB 3 color) into the component terminal and adjust R for white balance and BIAS for G until the chromaticity (x20, y20) is at the standard value.

(x20, y20) = (0.294 ±0.002, 0.310 ±0.002)

Input 1080/60i 80 IRE flat field (RGB 3 color) into the component terminal and adjust B for white balance and GAIN for G until the chromaticity (x80, y80) is at the standard value.

(x80, y80) = (0.294 ±0.002, 0.310 ±0.002)

Continue adjusting 80 IRE and 20 IRE until they reach standard values.

∗ If the BIAS value for B falls below 90, redo the adjustments using G and B.

Save the adjusted values

Low

Set Color Temp to “Low”.
Input 1080/60i 20 IRE flat field (RGB 3 color) into the component terminal and adjust B for white balance and BIAS for G until the chromaticity (x20, y20) is at the standard value.

(x20, y20) = (0.313 ±0.002, 0.329 ±0.002)

Input 1080/60i 80 IRE flat field (RGB 3 color) into the component terminal and adjust B for white balance and GAIN for G until the chromaticity (x80, y80) is at the standard value.

(x80, y80) = (0.313 ±0.002, 0.329 ±0.002)

Continue adjusting 80 IRE and 20 IRE until they reach standard values.

∗ If the BIAS value for B falls below 90, redo the adjustments using G and R.

Save the adjusted values

CUSTOM

Set Gain and Bias for CUSTOM 1 to 3 to the following values.

CUSTOM 1: Copy the Gain and Bias values for HIGH and make the Gain values for R/G/B ±20.

CUSTOM 2: Copy the Gain and Bias values for MIDDLE and make the Gain values for R/G/B ±0.

CUSTOM 3: Copy the Gain and Bias values for LOW and make the Gain values for R/G/B ±0.

Save the set values

Switch the Advanced Iris between “AUTO1” and “MANUAL”, and adjust each setting.
However, for the “AUTO” adjustment, if the Bias value for B falls below 82, redo the adjustment using G and R.
There are 3 types of adjustment data for color temperature and 3 types for Advanced Iris, for a total of 9 types.

2-3-2. Computer

Set Input-A to “Computer”.
Input WXGA 80 IRE flat field (RGB 3 color) into Input-A.
Copy the adjustment value from “Component” to each GAIN and each BIAS for RGB.
Save the set values

Section 3
Semiconductors

The following describes the semiconductor types used in this unit.
For semiconductors marked with page numbers in the index, refer to the corresponding pages in this section. However, in some cases incompatible types are also listed, therefore, when a part is to be replaced, also refer to the Spare Parts section.
In addition, for semiconductors with ID Nos., refer to the separate CD-ROM titled "Semiconductor Pin Assignments" (Sony Part No. 9-968-546-xx) that allows searching for parts by semiconductor type or ID No.
The semiconductors in the manual or on the CD-ROM are listed by equivalent types. Thus the external view or the index mark indication may differ from the actual type.
Pin assignments and block diagrams are based on the IC manufacturer's data book.

本機に使用されている半導体型名の一覧を下記に示します。索引中，ページが記載されている半導体は，本章の該当ページを参照してください。ただし，互換性のない型名を併記している場合がありますので，部品を交換するときは，Spare Partsの章を参照してください。
また，ID番号が記載されている半導体は，別途発行の "Semiconductor Pin Assignments" CD-ROM版(ソニー部品番号：9-968-546-xx)を参照してください。
半導体型名またはID番号から検索ができます。
マニュアルまたはCD-ROMに掲載されている半導体は，それぞれの機能を等価的に表わしたものです。
外観やインデックスマークの表示方法が実物と異なる場合があります。
ピン配置およびブロック図はICメーカーのデータブックに従いました。

DIODE	Page or ID No.
1SS355TE-17	DC008-02
D10SC4M	DM002-01
D10SC6M	DM002-01
D1FL20U-TA	DC007-01
D1FS4A-TA	DC007-01
D2FS6-TA	DC007-01
DAP202K-T-146	DC001-02
HN1D03FU-TE85R	DC005-05
M1FS4-4063	DC008-02
MA113-(TX)	DC008-01
MA3J14700LSO	DC001-01
RD12SB-T1	DC008-04
RD27SB-T1	DC008-04
RD5.6SB-T1	DC008-04
RD7.5M-T1B	DC001-04
RSB6.8SFTE61	DC008-06

LED	Page or ID No.
SEC2422C	LC003-03

TRANSISTOR	Page or ID No.
2SA1213Y-TE12L	TC002-01
2SA1576A-T106-QR	TC001-01
2SC4081T106R	TC001-02
DTA144EUA-T106	TC001-04
DTC144EUA-T106	TC001-03
HN1B01FU-TE85R	TC006-17

IC	Page or ID No.
74LCX541MTCX	MC74HC541N
BA6285FP-E2	BA6285FP
M24C64-WMN6T(B)	M24C02-MN6T
NJM2904V(TE2)	RC4558
NJM4556AV(TE2)	RC4558
NJM78M12DL1A-TE1	NJM78M12DLA_TE1
SN74LV125APWR	MC74HC125N
SN74LV4053APWR	MC74HC4053F
SN74LVC125APWR-12	MC74HC125N
TL431CPK-E2	NJM431U

Section 4
Spare Parts

4-1. Notes on Repair Parts

1. Safety Related Components Warning

WARNING

Components marked ⚠ are critical to safe operation. Therefore, specified parts should be used in the case of replacement.

WARNHINWEIS

Les composants identifiés par la marque ⚠ sont critiques pour la sécurité.
Ne les remplacer que par une pièce portant le numéro spécifié.

2. Standardization of Parts

Some repair parts supplied by Sony differ from those used for the unit. These are because of parts commonality and improvement.
Parts List has the present standardized repair parts.

3. Stock of Parts

Parts marked with "o" at SP (Supply Code) column of the Spare Parts list may not be stocked. Therefore, the delivery date will be delayed.
Items with no part number and no description are not stocked because they are seldom required for routine service.

4. Units for Capacitors, Inductors and Resistors

The following units are assumed in Schematic Diagrams, Electrical Parts List and Exploded Views unless otherwise specified.

Capacitors	: μF
Inductors	: μH
Resistors	: Ω

4-2. Exploded Views

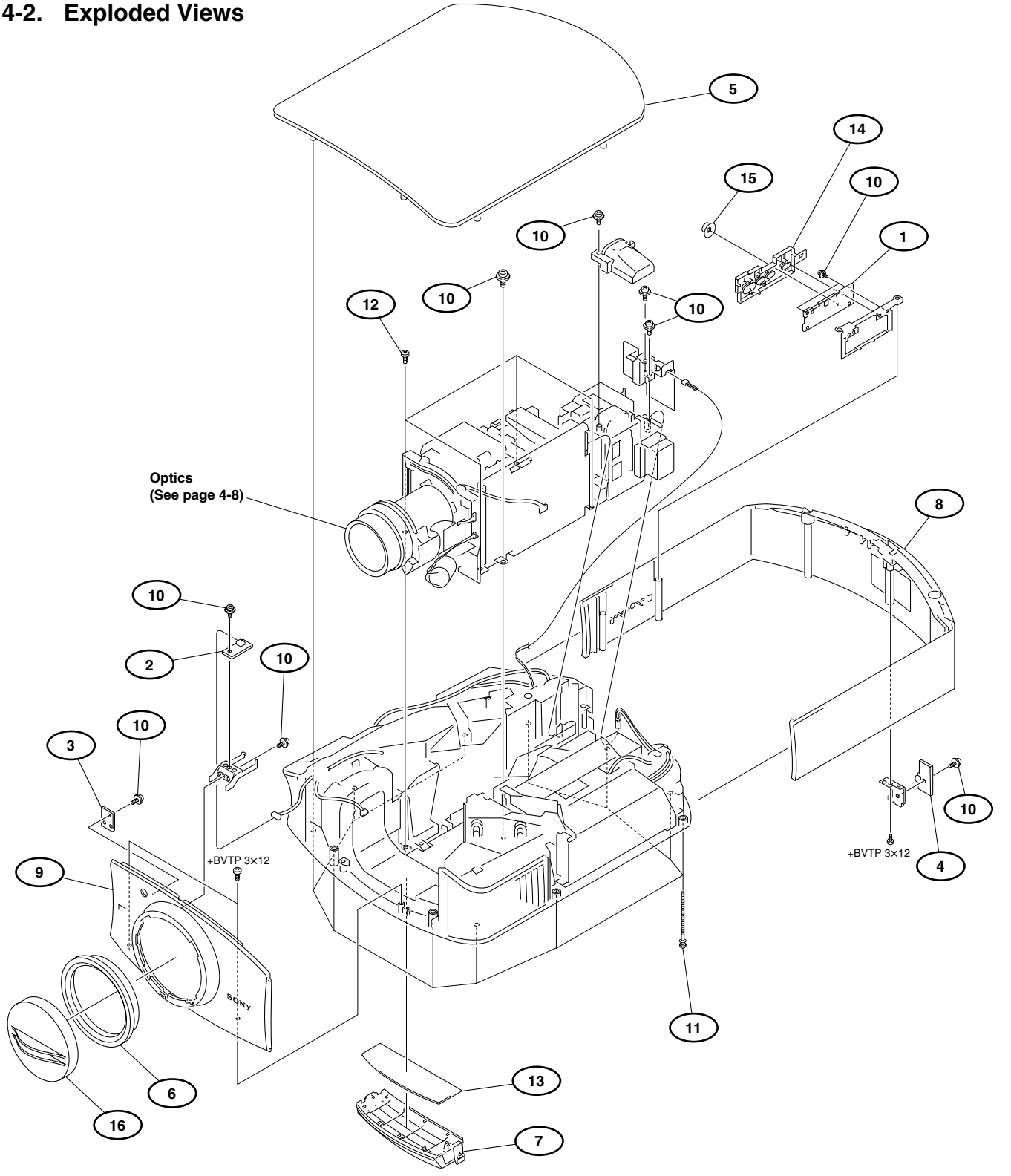

No.	Part No.	SP	Description
1	A-1186-997-A	s	MOUNTED CIRCUIT BOARD, HA
2	A-1186-998-A	s	MOUNTED CIRCUIT BOARD, HB
3	A-1186-999-A	s	MOUNTED CIRCUIT BOARD, NF
4	A-1187-000-A	s	MOUNTED CIRCUIT BOARD, NR
5	⚠ X-2148-684-1	s	COVER ASSY, TOP
6	X-2148-685-1	s	RING ASSY, LENS
7	⚠ X-2148-686-1	s	COVER ASSY, FILTER
8	⚠ X-2148-719-1	s	HOOD ASSY
9	⚠ X-2148-720-1	s	PANEL ASSY, FRONT
10	2-580-593-01	s	SCREW, +PSW M3X8
11	2-698-240-11	s	SHAFT (77)
12	2-580-640-01	s	SCREW, +BVTP2 4X16
13	⚠ 2-695-515-01	s	FILTER
14	2-695-536-01	s	BUTTON (A), CONTROL
15	⚠ 2-695-537-01	s	BUTTON, JOYSTICK
16	2-696-128-01	s	CAP, LENS
	7-685-648-79	s	SCREW +BVTP 3X12 TYPE2 IT-3

GA Board and GB Board

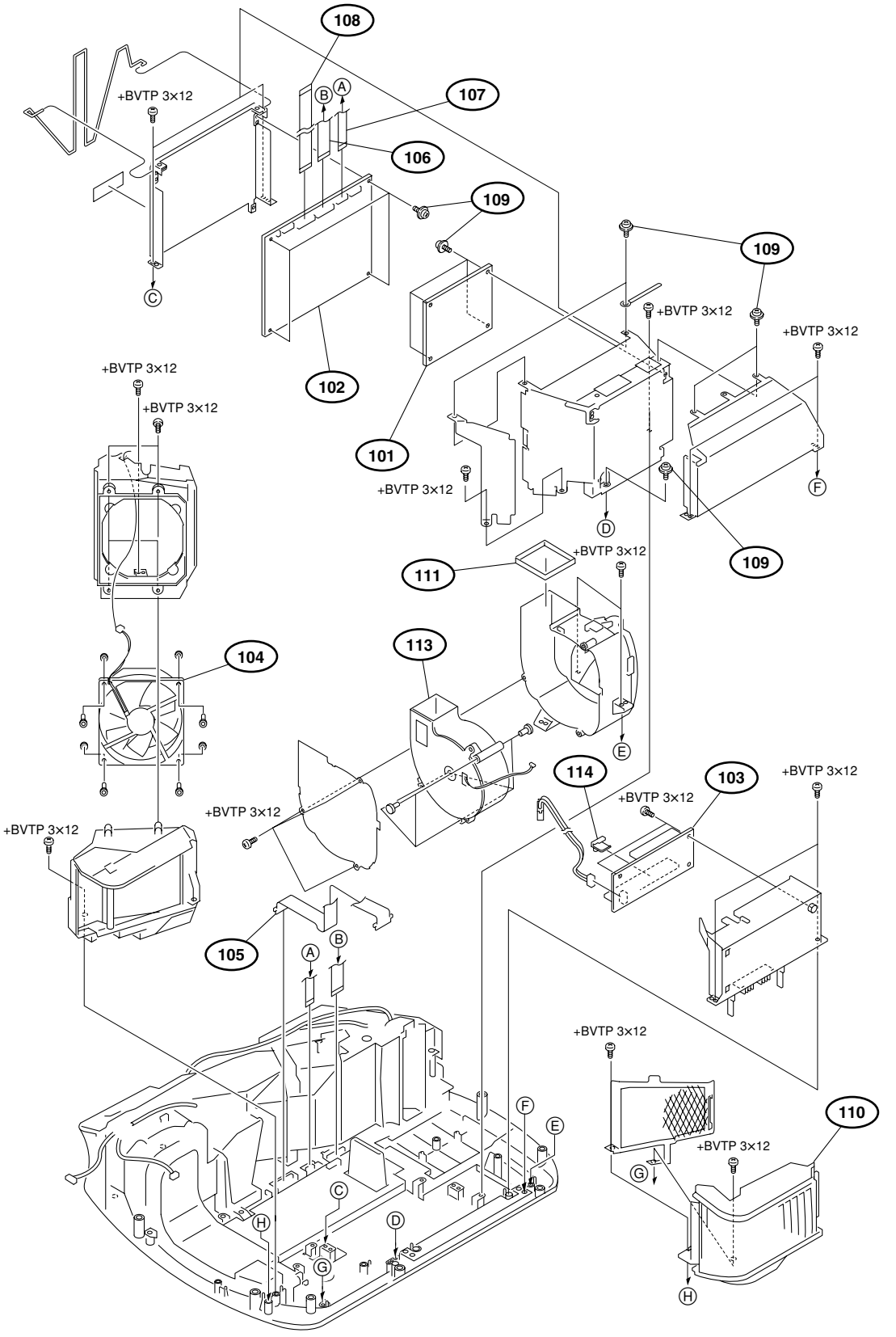

No.	Part No.	SP	Description
101	A-1186-987-A	s	MOUNTED CIRCUIT BOARD, GA
102	A-1186-988-A	s	MOUNTED CIRCUIT BOARD, GB
103	⚠ 1-725-513-14	s	POWER SUPPLY BLOCK
104	⚠ 1-763-422-21	s	FAN, DC
105	1-833-645-11	s	FLEXIBLE FLAT CABLE
106	1-910-028-06	s	CONNECTOR ASSY A, 1.0 FLAT 24P
107	1-910-028-07	s	CONNECTOR ASSY, 0.5 FLAT 24P
108	1-910-028-12	s	CONNECTOR ASSY B, 1.0 FLAT 24P
109	2-580-593-01	s	SCREW, +PSW M3X8
110	⚠ 2-695-507-01	s	LOUVER (R)
111	2-887-853-01	s	CUSHION (LAMP FAN)
113	⚠ 8-835-883-01	s	MOTOR, DC SFF22D/C-NP
114	2-893-004-01	s	SUPPORT, BALLAST
	7-685-648-79	s	SCREW +BVTP 3X12 TYPE2 IT-3

GS Board and F Board

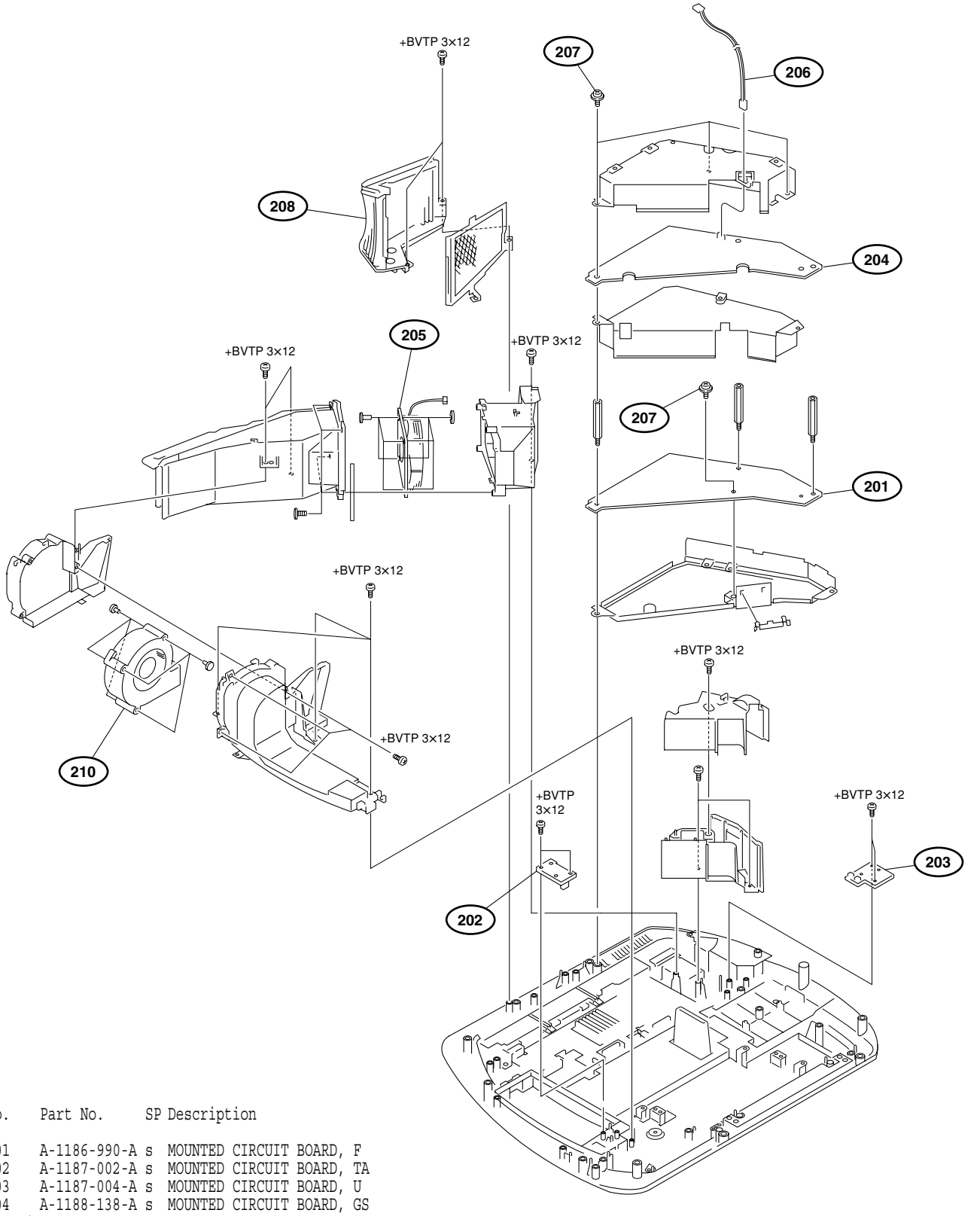

No.	Part No.	SP	Description
201	A-1186-990-A	s	MOUNTED CIRCUIT BOARD, F
202	A-1187-002-A	s	MOUNTED CIRCUIT BOARD, TA
203	A-1187-004-A	s	MOUNTED CIRCUIT BOARD, U
204	A-1188-138-A	s	MOUNTED CIRCUIT BOARD, GS
205	⚠ 1-763-422-21	s	FAN, DC
206	1-910-028-10	s	CONNECTOR ASSY, FUSE
207	2-580-593-01	s	SCREW, +PSW M3X8
208	⚠ 2-695-508-01	s	LOUVER (L)
210	⚠ 8-835-883-01	s	MOTOR, DC SFF22D/C-NP
	7-685-648-79	s	SCREW +BVTP 3X12 TYPE2 IT-3

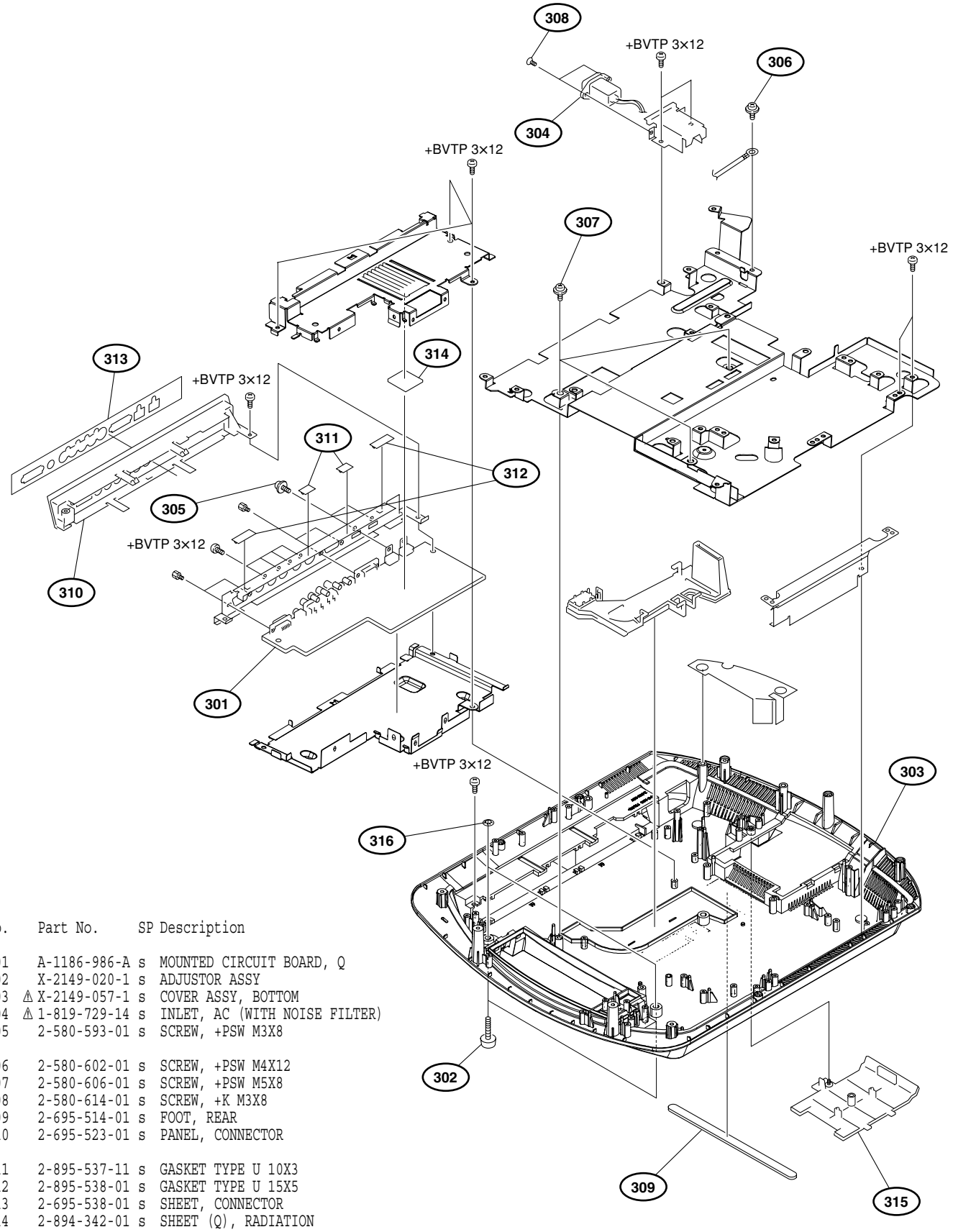

No.	Part No.	SP	Description
301	A-1186-986-A	s	MOUNTED CIRCUIT BOARD, Q
302	X-2149-020-1	s	ADJUSTOR ASSY
303	⚠ X-2149-057-1	s	COVER ASSY, BOTTOM
304	⚠ 1-819-729-14	s	INLET, AC (WITH NOISE FILTER)
305	2-580-593-01	s	SCREW, +PSW M3X8
306	2-580-602-01	s	SCREW, +PSW M4X12
307	2-580-606-01	s	SCREW, +PSW M5X8
308	2-580-614-01	s	SCREW, +K M3X8
309	2-695-514-01	s	FOOT, REAR
310	2-695-523-01	s	PANEL, CONNECTOR
311	2-895-537-11	s	GASKET TYPE U 10X3
312	2-895-538-01	s	GASKET TYPE U 15X5
313	2-695-538-01	s	SHEET, CONNECTOR
314	2-894-342-01	s	SHEET (Q), RADIATION
315	2-695-509-01	s	LAMP COVER
316	4-303-605-00	s	NUT
	7-685-648-79	s	SCREW +BVTP 3X12 TYPE2 IT-3

Optics

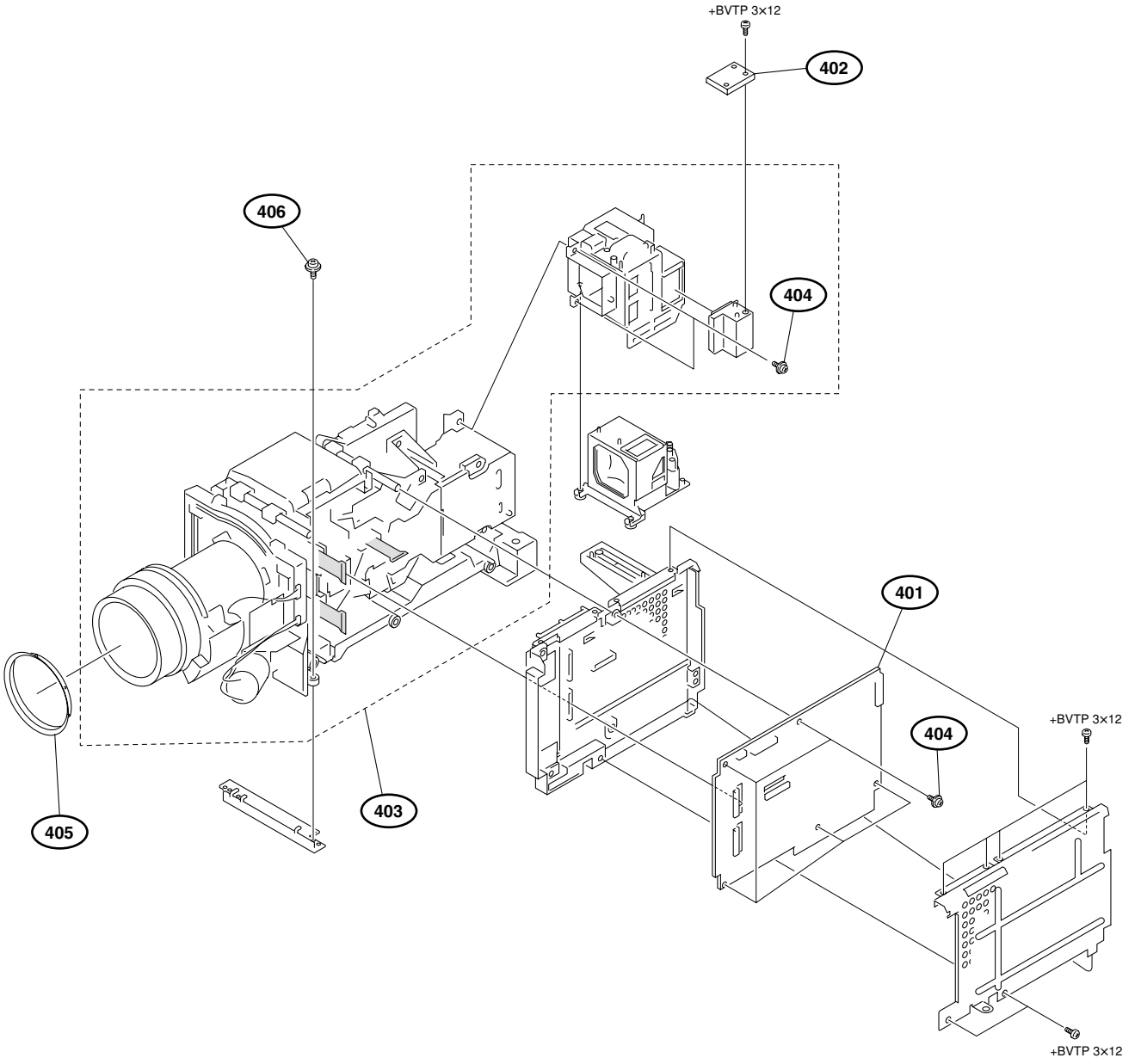

No.	Part No.	SP	Description
401	A-1186-985-A	s	MOUNTED CIRCUIT BOARD, C
402	A-1187-003-A	s	MOUNTED CIRCUIT BOARD, TL
403	A-1218-877-A	s	ASSY, OPT UINT
404	2-580-593-01	s	SCREW, +PSW M3X8
405	2-656-281-01	s	RING (LENS)
406	2-580-602-01	s	SCREW, PSW M4X12
	7-685-648-79	s	SCREW +BVTP 3X12 TYPE2 IT-3

4-3. Electrical Parts List

C BOARD

Ref. No. or Q'ty	Part No.	SP	Description
1pc	A-1186-985-A	s	MOUNTED CIRCUIT BOARD, C
C101	1-100-916-11	s	CAP, CERAMIC 0.1MF X7R 1005
C102	1-164-858-81	s	CAP, CHIP CERAMIC 22PF CH 1005
C103	1-100-906-11	s	CAP,CERAMIC 0.01MF X7R 1005
C104	1-112-300-91	s	CAP, CERAMIC 4.7MF B (2012)
C200	1-100-909-11	s	CAP, CERAMIC 10MF X6S 2012
C201	1-100-909-11	s	CAP, CERAMIC 10MF X6S 2012
C202	1-100-907-11	s	CAP,CERAMIC 0.1MF X7R 1005
C203	1-100-907-11	s	CAP,CERAMIC 0.1MF X7R 1005
C204	1-112-777-11	s	CAP, CERAMIC 0.01MF X7R 1005
C205	1-112-777-11	s	CAP, CERAMIC 0.01MF X7R 1005
C206	1-100-905-11	s	CAP, CERAMIC1000PF X7R 1005
C207	1-100-905-11	s	CAP, CERAMIC1000PF X7R 1005
C208	1-100-905-11	s	CAP, CERAMIC1000PF X7R 1005
C209	1-112-777-11	s	CAP, CERAMIC 0.01MF X7R 1005
C210	1-100-907-11	s	CAP,CERAMIC 0.1MF X7R 1005
C211	1-100-909-11	s	CAP, CERAMIC 10MF X6S 2012
C212	1-100-905-11	s	CAP, CERAMIC1000PF X7R 1005
C213	1-112-777-11	s	CAP, CERAMIC 0.01MF X7R 1005
C214	1-100-907-11	s	CAP,CERAMIC 0.1MF X7R 1005
C215	1-100-909-11	s	CAP, CERAMIC 10MF X6S 2012
C216	1-100-907-11	s	CAP,CERAMIC 0.1MF X7R 1005
C217	1-100-907-11	s	CAP,CERAMIC 0.1MF X7R 1005
C218	1-100-907-11	s	CAP,CERAMIC 0.1MF X7R 1005
C219	1-100-907-11	s	CAP,CERAMIC 0.1MF X7R 1005
C220	1-100-907-11	s	CAP,CERAMIC 0.1MF X7R 1005
C221	1-100-907-11	s	CAP,CERAMIC 0.1MF X7R 1005
C222	1-100-907-11	s	CAP,CERAMIC 0.1MF X7R 1005
C223	1-100-907-11	s	CAP,CERAMIC 0.1MF X7R 1005
C224	1-100-909-11	s	CAP, CERAMIC 10MF X6S 2012
C225	1-100-909-11	s	CAP, CERAMIC 10MF X6S 2012
C226	1-100-905-11	s	CAP, CERAMIC1000PF X7R 1005
C227	1-100-905-11	s	CAP, CERAMIC1000PF X7R 1005
C300	1-112-780-11	s	CAP, CERAMIC 0.47MF X7R 1608
C301	1-100-907-11	s	CAP,CERAMIC 0.1MF X7R 1005
C302	1-100-907-11	s	CAP,CERAMIC 0.1MF X7R 1005
C303	1-112-046-11	s	CAP, CERAMIC 4.7MF X6S 2012
C304	1-112-781-11	s	CAP, CERAMIC 1MF X7R 1608
C305	1-100-907-11	s	CAP,CERAMIC 0.1MF X7R 1005
C306	1-100-907-11	s	CAP,CERAMIC 0.1MF X7R 1005
C307	1-125-777-81	s	CAP, CHIP CERAMIC 0.1MF B 1005
C308	1-100-907-11	s	CAP,CERAMIC 0.1MF X7R 1005
C309	1-100-907-11	s	CAP,CERAMIC 0.1MF X7R 1005
C310	1-128-589-21	s	CAP, CHIP ELECT 47MF
C311	1-112-781-11	s	CAP, CERAMIC 1MF X7R 1608
C312	1-100-907-11	s	CAP,CERAMIC 0.1MF X7R 1005
C313	1-100-905-11	s	CAP, CERAMIC1000PF X7R 1005
C314	1-100-907-11	s	CAP,CERAMIC 0.1MF X7R 1005
C315	1-100-907-11	s	CAP,CERAMIC 0.1MF X7R 1005
C316	1-100-907-11	s	CAP,CERAMIC 0.1MF X7R 1005
C317	1-100-907-11	s	CAP,CERAMIC 0.1MF X7R 1005
C318	1-100-907-11	s	CAP,CERAMIC 0.1MF X7R 1005
C319	1-100-907-11	s	CAP,CERAMIC 0.1MF X7R 1005
C320	1-100-907-11	s	CAP,CERAMIC 0.1MF X7R 1005
C321	1-100-905-11	s	CAP, CERAMIC1000PF X7R 1005
C322	1-100-907-11	s	CAP,CERAMIC 0.1MF X7R 1005
C323	1-100-907-11	s	CAP,CERAMIC 0.1MF X7R 1005
C324	1-100-907-11	s	CAP,CERAMIC 0.1MF X7R 1005

(C BOARD)

Ref. No. or Q'ty	Part No.	SP	Description
C325	1-100-905-11	s	CAP, CERAMIC1000PF X7R 1005
C326	1-100-905-11	s	CAP, CERAMIC1000PF X7R 1005
C327	1-100-907-11	s	CAP,CERAMIC 0.1MF X7R 1005
C328	1-100-907-11	s	CAP,CERAMIC 0.1MF X7R 1005
C329	1-100-907-11	s	CAP,CERAMIC 0.1MF X7R 1005
C330	1-100-907-11	s	CAP,CERAMIC 0.1MF X7R 1005
C331	1-100-905-11	s	CAP, CERAMIC1000PF X7R 1005
C332	1-100-905-11	s	CAP, CERAMIC1000PF X7R 1005
C333	1-100-907-11	s	CAP,CERAMIC 0.1MF X7R 1005
C334	1-100-907-11	s	CAP,CERAMIC 0.1MF X7R 1005
C335	1-100-907-11	s	CAP,CERAMIC 0.1MF X7R 1005
C336	1-100-907-11	s	CAP,CERAMIC 0.1MF X7R 1005
C337	1-100-907-11	s	CAP,CERAMIC 0.1MF X7R 1005
C338	1-100-907-11	s	CAP,CERAMIC 0.1MF X7R 1005
C339	1-100-905-11	s	CAP, CERAMIC1000PF X7R 1005
C340	1-112-781-11	s	CAP, CERAMIC 1MF X7R 1608
C341	1-128-590-21	s	CAP, CHIP ELECT 100MF
C342	1-131-956-21	s	CAP, ELECT 220MF (6.3X5.4)
C343	1-131-956-21	s	CAP, ELECT 220MF (6.3X5.4)
C345	1-100-907-11	s	CAP,CERAMIC 0.1MF X7R 1005
C346	1-100-907-11	s	CAP,CERAMIC 0.1MF X7R 1005
C400	1-112-780-11	s	CAP, CERAMIC 0.47MF X7R 1608
C401	1-100-907-11	s	CAP,CERAMIC 0.1MF X7R 1005
C402	1-100-907-11	s	CAP,CERAMIC 0.1MF X7R 1005
C403	1-112-046-11	s	CAP, CERAMIC 4.7MF X6S 2012
C404	1-112-781-11	s	CAP, CERAMIC 1MF X7R 1608
C405	1-100-907-11	s	CAP,CERAMIC 0.1MF X7R 1005
C406	1-100-907-11	s	CAP,CERAMIC 0.1MF X7R 1005
C407	1-125-777-81	s	CAP, CHIP CERAMIC 0.1MF B 1005
C408	1-100-907-11	s	CAP,CERAMIC 0.1MF X7R 1005
C409	1-128-589-21	s	CAP, CHIP ELECT 47MF
C410	1-112-781-11	s	CAP, CERAMIC 1MF X7R 1608
C411	1-100-907-11	s	CAP,CERAMIC 0.1MF X7R 1005
C412	1-100-907-11	s	CAP,CERAMIC 0.1MF X7R 1005
C413	1-100-907-11	s	CAP,CERAMIC 0.1MF X7R 1005
C414	1-100-907-11	s	CAP,CERAMIC 0.1MF X7R 1005
C415	1-100-907-11	s	CAP,CERAMIC 0.1MF X7R 1005
C416	1-100-905-11	s	CAP, CERAMIC1000PF X7R 1005
C417	1-100-907-11	s	CAP,CERAMIC 0.1MF X7R 1005
C418	1-100-907-11	s	CAP,CERAMIC 0.1MF X7R 1005
C419	1-100-907-11	s	CAP,CERAMIC 0.1MF X7R 1005
C420	1-100-905-11	s	CAP, CERAMIC1000PF X7R 1005
C421	1-100-907-11	s	CAP,CERAMIC 0.1MF X7R 1005
C422	1-100-907-11	s	CAP,CERAMIC 0.1MF X7R 1005
C423	1-100-907-11	s	CAP,CERAMIC 0.1MF X7R 1005
C424	1-100-905-11	s	CAP, CERAMIC1000PF X7R 1005
C425	1-100-905-11	s	CAP, CERAMIC1000PF X7R 1005
C426	1-100-907-11	s	CAP,CERAMIC 0.1MF X7R 1005
C427	1-100-907-11	s	CAP,CERAMIC 0.1MF X7R 1005
C428	1-100-907-11	s	CAP,CERAMIC 0.1MF X7R 1005
C429	1-100-907-11	s	CAP,CERAMIC 0.1MF X7R 1005
C430	1-100-905-11	s	CAP, CERAMIC1000PF X7R 1005
C431	1-100-905-11	s	CAP, CERAMIC1000PF X7R 1005
C432	1-100-907-11	s	CAP,CERAMIC 0.1MF X7R 1005
C433	1-100-907-11	s	CAP,CERAMIC 0.1MF X7R 1005
C434	1-100-907-11	s	CAP,CERAMIC 0.1MF X7R 1005
C435	1-100-907-11	s	CAP,CERAMIC 0.1MF X7R 1005
C436	1-100-907-11	s	CAP,CERAMIC 0.1MF X7R 1005
C437	1-100-907-11	s	CAP,CERAMIC 0.1MF X7R 1005

(C BOARD)

Ref. No. or Q'ty	Part No.	SP	Description
C438	1-100-905-11	s	CAP, CERAMIC1000PF X7R 1005
C439	1-112-781-11	s	CAP, CERAMIC 1MF X7R 1608
C440	1-131-956-21	s	CAP, ELECT 220MF (6.3X5.4)
C441	1-131-956-21	s	CAP, ELECT 220MF (6.3X5.4)
C442	1-128-590-21	s	CAP, CHIP ELECT 100MF
C444	1-100-907-11	s	CAP,CERAMIC 0.1MF X7R 1005
C445	1-100-907-11	s	CAP,CERAMIC 0.1MF X7R 1005
C500	1-100-907-11	s	CAP,CERAMIC 0.1MF X7R 1005
C501	1-100-905-11	s	CAP, CERAMIC1000PF X7R 1005
C502	1-100-907-11	s	CAP,CERAMIC 0.1MF X7R 1005
C503	1-112-777-11	s	CAP, CERAMIC 0.01MF X7R 1005
C504	1-100-907-11	s	CAP,CERAMIC 0.1MF X7R 1005
C505	1-112-777-11	s	CAP, CERAMIC 0.01MF X7R 1005
C506	1-112-777-11	s	CAP, CERAMIC 0.01MF X7R 1005
C507	1-112-777-11	s	CAP, CERAMIC 0.01MF X7R 1005
C508	1-112-777-11	s	CAP, CERAMIC 0.01MF X7R 1005
C509	1-100-907-11	s	CAP,CERAMIC 0.1MF X7R 1005
C510	1-100-907-11	s	CAP,CERAMIC 0.1MF X7R 1005
C511	1-100-907-11	s	CAP,CERAMIC 0.1MF X7R 1005
C512	1-100-907-11	s	CAP,CERAMIC 0.1MF X7R 1005
C513	1-100-907-11	s	CAP,CERAMIC 0.1MF X7R 1005
C514	1-100-907-11	s	CAP,CERAMIC 0.1MF X7R 1005
C515	1-100-907-11	s	CAP,CERAMIC 0.1MF X7R 1005
C516	1-100-907-11	s	CAP,CERAMIC 0.1MF X7R 1005
C517	1-100-905-11	s	CAP, CERAMIC1000PF X7R 1005
C518	1-112-781-11	s	CAP, CERAMIC 1MF X7R 1608
C519	1-100-905-11	s	CAP, CERAMIC1000PF X7R 1005
C520	1-112-777-11	s	CAP, CERAMIC 0.01MF X7R 1005
C521	1-112-193-21	s	CAP, CHIP ELECT 22MF
C522	1-100-907-11	s	CAP,CERAMIC 0.1MF X7R 1005
C523	1-100-907-11	s	CAP,CERAMIC 0.1MF X7R 1005
C524	1-112-777-11	s	CAP, CERAMIC 0.01MF X7R 1005
C525	1-100-907-11	s	CAP,CERAMIC 0.1MF X7R 1005
C526	1-100-909-11	s	CAP, CERAMIC 10MF X6S 2012
C527	1-100-907-11	s	CAP,CERAMIC 0.1MF X7R 1005
C528	1-100-909-11	s	CAP, CERAMIC 10MF X6S 2012
C529	1-100-907-11	s	CAP,CERAMIC 0.1MF X7R 1005
C530	1-100-909-11	s	CAP, CERAMIC 10MF X6S 2012
C531	1-100-907-11	s	CAP,CERAMIC 0.1MF X7R 1005
C532	1-100-909-11	s	CAP, CERAMIC 10MF X6S 2012
C533	1-131-956-21	s	CAP, ELECT 220MF (6.3X5.4)
C534	1-100-905-11	s	CAP, CERAMIC1000PF X7R 1005
C535	1-112-777-11	s	CAP, CERAMIC 0.01MF X7R 1005
C536	1-112-777-11	s	CAP, CERAMIC 0.01MF X7R 1005
C537	1-112-777-11	s	CAP, CERAMIC 0.01MF X7R 1005
C538	1-112-777-11	s	CAP, CERAMIC 0.01MF X7R 1005
C539	1-112-777-11	s	CAP, CERAMIC 0.01MF X7R 1005
C540	1-112-777-11	s	CAP, CERAMIC 0.01MF X7R 1005
C541	1-100-905-11	s	CAP, CERAMIC1000PF X7R 1005
C542	1-100-909-11	s	CAP, CERAMIC 10MF X6S 2012
C543	1-100-421-21	s	CAP, ELECT 220MF (6.3X5.9)
C544	1-100-905-11	s	CAP, CERAMIC1000PF X7R 1005
C545	1-100-909-11	s	CAP, CERAMIC 10MF X6S 2012
C547	1-100-909-11	s	CAP, CERAMIC 10MF X6S 2012
C548	1-112-064-11	s	CAP, CERAMIC 2.2MF X7R 2012
C549	1-100-907-11	s	CAP,CERAMIC 0.1MF X7R 1005
C550	1-100-909-11	s	CAP, CERAMIC 10MF X6S 2012
C551	1-100-907-11	s	CAP,CERAMIC 0.1MF X7R 1005
C552	1-100-907-11	s	CAP,CERAMIC 0.1MF X7R 1005

(C BOARD)

Ref. No. or Q'ty	Part No.	SP	Description
C553	1-100-907-11	s	CAP,CERAMIC 0.1MF X7R 1005
C555	1-100-907-11	s	CAP,CERAMIC 0.1MF X7R 1005
C556	1-100-907-11	s	CAP,CERAMIC 0.1MF X7R 1005
C557	1-131-956-21	s	CAP, ELECT 220MF (6.3X5.4)
C558	1-100-907-11	s	CAP,CERAMIC 0.1MF X7R 1005
C563	1-100-907-11	s	CAP,CERAMIC 0.1MF X7R 1005
C564	1-100-907-11	s	CAP,CERAMIC 0.1MF X7R 1005
C565	1-100-907-11	s	CAP,CERAMIC 0.1MF X7R 1005
C566	1-100-907-11	s	CAP,CERAMIC 0.1MF X7R 1005
C567	1-100-905-11	s	CAP, CERAMIC1000PF X7R 1005
C600	1-100-909-11	s	CAP, CERAMIC 10MF X6S 2012
C601	1-112-064-11	s	CAP, CERAMIC 2.2MF X7R 2012
C602	1-100-909-11	s	CAP, CERAMIC 10MF X6S 2012
C603	1-100-909-11	s	CAP, CERAMIC 10MF X6S 2012
C605	1-131-956-21	s	CAP, ELECT 220MF (6.3X5.4)
C606	1-100-907-11	s	CAP,CERAMIC 0.1MF X7R 1005
C607	1-100-907-11	s	CAP,CERAMIC 0.1MF X7R 1005
C608	1-100-907-11	s	CAP,CERAMIC 0.1MF X7R 1005
C609	1-100-907-11	s	CAP,CERAMIC 0.1MF X7R 1005
C610	1-100-907-11	s	CAP,CERAMIC 0.1MF X7R 1005
C611	1-100-905-11	s	CAP, CERAMIC1000PF X7R 1005
C612	1-112-777-11	s	CAP, CERAMIC 0.01MF X7R 1005
C613	1-112-777-11	s	CAP, CERAMIC 0.01MF X7R 1005
C614	1-112-777-11	s	CAP, CERAMIC 0.01MF X7R 1005
C615	1-112-777-11	s	CAP, CERAMIC 0.01MF X7R 1005
C616	1-112-777-11	s	CAP, CERAMIC 0.01MF X7R 1005
C617	1-112-193-21	s	CAP, CHIP ELECT 22MF
C618	1-112-777-11	s	CAP, CERAMIC 0.01MF X7R 1005
C619	1-100-909-11	s	CAP, CERAMIC 10MF X6S 2012
C620	1-100-909-11	s	CAP, CERAMIC 10MF X6S 2012
C621	1-100-909-11	s	CAP, CERAMIC 10MF X6S 2012
C622	1-100-909-11	s	CAP, CERAMIC 10MF X6S 2012
C623	1-131-956-21	s	CAP, ELECT 220MF (6.3X5.4)
C624	1-100-909-11	s	CAP, CERAMIC 10MF X6S 2012
C625	1-100-905-11	s	CAP, CERAMIC1000PF X7R 1005
C626	1-112-781-11	s	CAP, CERAMIC 1MF X7R 1608
C627	1-112-777-11	s	CAP, CERAMIC 0.01MF X7R 1005
C628	1-100-907-11	s	CAP,CERAMIC 0.1MF X7R 1005
C629	1-100-907-11	s	CAP,CERAMIC 0.1MF X7R 1005
C630	1-100-907-11	s	CAP,CERAMIC 0.1MF X7R 1005
C631	1-100-907-11	s	CAP,CERAMIC 0.1MF X7R 1005
C632	1-100-907-11	s	CAP,CERAMIC 0.1MF X7R 1005
C633	1-100-907-11	s	CAP,CERAMIC 0.1MF X7R 1005
C634	1-100-907-11	s	CAP,CERAMIC 0.1MF X7R 1005
C635	1-100-907-11	s	CAP,CERAMIC 0.1MF X7R 1005
C636	1-100-905-11	s	CAP, CERAMIC1000PF X7R 1005
C637	1-112-777-11	s	CAP, CERAMIC 0.01MF X7R 1005
C638	1-112-777-11	s	CAP, CERAMIC 0.01MF X7R 1005
C639	1-112-777-11	s	CAP, CERAMIC 0.01MF X7R 1005
C640	1-112-777-11	s	CAP, CERAMIC 0.01MF X7R 1005
C641	1-112-777-11	s	CAP, CERAMIC 0.01MF X7R 1005
C642	1-112-777-11	s	CAP, CERAMIC 0.01MF X7R 1005
C643	1-100-905-11	s	CAP, CERAMIC1000PF X7R 1005
C644	1-100-905-11	s	CAP, CERAMIC1000PF X7R 1005
C645	1-100-905-11	s	CAP, CERAMIC1000PF X7R 1005
C646	1-100-907-11	s	CAP,CERAMIC 0.1MF X7R 1005
C647	1-100-907-11	s	CAP,CERAMIC 0.1MF X7R 1005
C648	1-100-907-11	s	CAP,CERAMIC 0.1MF X7R 1005
C649	1-100-907-11	s	CAP,CERAMIC 0.1MF X7R 1005

(C BOARD)

Ref. No. or Q'ty	Part No.	SP	Description
C650	1-100-907-11	s	CAP,CERAMIC 0.1MF X7R 1005
C651	1-100-907-11	s	CAP,CERAMIC 0.1MF X7R 1005
C652	1-100-907-11	s	CAP,CERAMIC 0.1MF X7R 1005
C653	1-100-907-11	s	CAP,CERAMIC 0.1MF X7R 1005
C654	1-100-907-11	s	CAP,CERAMIC 0.1MF X7R 1005
C655	1-100-907-11	s	CAP,CERAMIC 0.1MF X7R 1005
C660	1-100-907-11	s	CAP,CERAMIC 0.1MF X7R 1005
C661	1-100-907-11	s	CAP,CERAMIC 0.1MF X7R 1005
C662	1-100-907-11	s	CAP,CERAMIC 0.1MF X7R 1005
C663	1-100-907-11	s	CAP,CERAMIC 0.1MF X7R 1005
C664	1-100-907-11	s	CAP,CERAMIC 0.1MF X7R 1005
C665	1-100-905-11	s	CAP, CERAMIC1000PF X7R 1005
C700	1-128-589-21	s	CAP, CHIP ELECT 47MF
C701	1-100-907-11	s	CAP,CERAMIC 0.1MF X7R 1005
C702	1-128-589-21	s	CAP, CHIP ELECT 47MF
C703	1-100-907-11	s	CAP,CERAMIC 0.1MF X7R 1005
C704	1-100-907-11	s	CAP,CERAMIC 0.1MF X7R 1005
C705	1-100-907-11	s	CAP,CERAMIC 0.1MF X7R 1005
C706	1-100-907-11	s	CAP,CERAMIC 0.1MF X7R 1005
C707	1-100-907-11	s	CAP,CERAMIC 0.1MF X7R 1005
C710	1-112-774-11	s	CAP, CERAMIC 470PF X7R 1005
C711	1-164-004-91	s	CAP, CERAMIC 100000PF B (2012)
C712	1-112-780-11	s	CAP, CERAMIC 0.47MF X7R 1608
C713	1-112-780-11	s	CAP, CERAMIC 0.47MF X7R 1608
C714	1-112-774-11	s	CAP, CERAMIC 470PF X7R 1005
C716	1-164-004-91	s	CAP, CERAMIC 100000PF B (2012)
C717	1-164-004-91	s	CAP, CERAMIC 100000PF B (2012)
C718	1-137-942-21	s	CAP, ELECT 47MF (6.3X5.4)
C719	1-137-942-21	s	CAP, ELECT 47MF (6.3X5.4)
C720	1-164-004-91	s	CAP, CERAMIC 100000PF B (2012)
C721	1-164-004-91	s	CAP, CERAMIC 100000PF B (2012)
C722	1-137-942-21	s	CAP, ELECT 47MF (6.3X5.4)
C723	1-164-004-91	s	CAP, CERAMIC 100000PF B (2012)
C724	1-164-004-91	s	CAP, CERAMIC 100000PF B (2012)
C725	1-164-004-91	s	CAP, CERAMIC 100000PF B (2012)
C726	1-164-004-91	s	CAP, CERAMIC 100000PF B (2012)
C727	1-164-004-91	s	CAP, CERAMIC 100000PF B (2012)
C728	1-137-942-21	s	CAP, ELECT 47MF (6.3X5.4)
C729	1-164-004-91	s	CAP, CERAMIC 100000PF B (2012)
C730	1-164-004-91	s	CAP, CERAMIC 100000PF B (2012)
C731	1-164-004-91	s	CAP, CERAMIC 100000PF B (2012)
C732	1-164-004-91	s	CAP, CERAMIC 100000PF B (2012)
C733	1-164-004-91	s	CAP, CERAMIC 100000PF B (2012)
C734	1-100-907-11	s	CAP,CERAMIC 0.1MF X7R 1005
C735	1-112-777-11	s	CAP, CERAMIC 0.01MF X7R 1005
C736	1-164-004-91	s	CAP, CERAMIC 100000PF B (2012)
C737	1-100-907-11	s	CAP,CERAMIC 0.1MF X7R 1005
C738	1-112-777-11	s	CAP, CERAMIC 0.01MF X7R 1005
C739	1-137-942-21	s	CAP, ELECT 47MF (6.3X5.4)
C740	1-128-589-21	s	CAP, CHIP ELECT 47MF
C741	1-100-907-11	s	CAP,CERAMIC 0.1MF X7R 1005
C742	1-164-004-91	s	CAP, CERAMIC 100000PF B (2012)
C743	1-128-589-21	s	CAP, CHIP ELECT 47MF
C744	1-112-194-21	s	CAP, CHIP ELECT 10MF
C745	1-164-004-91	s	CAP, CERAMIC 100000PF B (2012)
C746	1-112-194-21	s	CAP, CHIP ELECT 10MF
C747	1-164-004-91	s	CAP, CERAMIC 100000PF B (2012)
C748	1-100-916-11	s	CAP, CERAMIC 0.1MF X7R 1005
C749	1-128-589-21	s	CAP, CHIP ELECT 47MF

(C BOARD)

Ref. No. or Q'ty	Part No.	SP	Description
C751	1-100-916-11	s	CAP, CERAMIC 0.1MF X7R 1005
C800	1-128-589-21	s	CAP, CHIP ELECT 47MF
C801	1-100-907-11	s	CAP,CERAMIC 0.1MF X7R 1005
C802	1-128-589-21	s	CAP, CHIP ELECT 47MF
C803	1-100-907-11	s	CAP,CERAMIC 0.1MF X7R 1005
C804	1-100-907-11	s	CAP,CERAMIC 0.1MF X7R 1005
C805	1-100-907-11	s	CAP,CERAMIC 0.1MF X7R 1005
C806	1-100-907-11	s	CAP,CERAMIC 0.1MF X7R 1005
C807	1-100-907-11	s	CAP,CERAMIC 0.1MF X7R 1005
C810	1-112-774-11	s	CAP, CERAMIC 470PF X7R 1005
C811	1-164-004-91	s	CAP, CERAMIC 100000PF B (2012)
C812	1-112-780-11	s	CAP, CERAMIC 0.47MF X7R 1608
C813	1-112-780-11	s	CAP, CERAMIC 0.47MF X7R 1608
C814	1-112-774-11	s	CAP, CERAMIC 470PF X7R 1005
C816	1-164-004-91	s	CAP, CERAMIC 100000PF B (2012)
C817	1-164-004-91	s	CAP, CERAMIC 100000PF B (2012)
C818	1-137-942-21	s	CAP, ELECT 47MF (6.3X5.4)
C819	1-137-942-21	s	CAP, ELECT 47MF (6.3X5.4)
C820	1-164-004-91	s	CAP, CERAMIC 100000PF B (2012)
C821	1-164-004-91	s	CAP, CERAMIC 100000PF B (2012)
C822	1-137-942-21	s	CAP, ELECT 47MF (6.3X5.4)
C823	1-164-004-91	s	CAP, CERAMIC 100000PF B (2012)
C824	1-164-004-91	s	CAP, CERAMIC 100000PF B (2012)
C825	1-164-004-91	s	CAP, CERAMIC 100000PF B (2012)
C826	1-164-004-91	s	CAP, CERAMIC 100000PF B (2012)
C827	1-164-004-91	s	CAP, CERAMIC 100000PF B (2012)
C828	1-137-942-21	s	CAP, ELECT 47MF (6.3X5.4)
C829	1-164-004-91	s	CAP, CERAMIC 100000PF B (2012)
C830	1-164-004-91	s	CAP, CERAMIC 100000PF B (2012)
C831	1-164-004-91	s	CAP, CERAMIC 100000PF B (2012)
C832	1-164-004-91	s	CAP, CERAMIC 100000PF B (2012)
C833	1-164-004-91	s	CAP, CERAMIC 100000PF B (2012)
C834	1-112-777-11	s	CAP, CERAMIC 0.01MF X7R 1005
C835	1-164-004-91	s	CAP, CERAMIC 100000PF B (2012)
C836	1-112-777-11	s	CAP, CERAMIC 0.01MF X7R 1005
C837	1-137-942-21	s	CAP, ELECT 47MF (6.3X5.4)
C838	1-100-907-11	s	CAP,CERAMIC 0.1MF X7R 1005
C839	1-164-004-91	s	CAP, CERAMIC 100000PF B (2012)
C840	1-164-004-91	s	CAP, CERAMIC 100000PF B (2012)
C841	1-128-589-21	s	CAP, CHIP ELECT 47MF
C842	1-112-194-21	s	CAP, CHIP ELECT 10MF
C843	1-164-004-91	s	CAP, CERAMIC 100000PF B (2012)
C844	1-112-194-21	s	CAP, CHIP ELECT 10MF
C845	1-100-916-11	s	CAP, CERAMIC 0.1MF X7R 1005
C846	1-128-589-21	s	CAP, CHIP ELECT 47MF
C848	1-100-916-11	s	CAP, CERAMIC 0.1MF X7R 1005
C849	1-100-916-11	s	CAP, CERAMIC 0.1MF X7R 1005
C850	1-100-906-11	s	CAP,CERAMIC 0.01MF X7R 1005
C900	1-128-589-21	s	CAP, CHIP ELECT 47MF
C901	1-100-907-11	s	CAP,CERAMIC 0.1MF X7R 1005
C902	1-128-589-21	s	CAP, CHIP ELECT 47MF
C903	1-100-907-11	s	CAP,CERAMIC 0.1MF X7R 1005
C904	1-100-907-11	s	CAP,CERAMIC 0.1MF X7R 1005
C905	1-100-907-11	s	CAP,CERAMIC 0.1MF X7R 1005
C906	1-100-907-11	s	CAP,CERAMIC 0.1MF X7R 1005
C907	1-100-907-11	s	CAP,CERAMIC 0.1MF X7R 1005
C910	1-112-774-11	s	CAP, CERAMIC 470PF X7R 1005
C911	1-164-004-91	s	CAP, CERAMIC 100000PF B (2012)
C912	1-112-780-11	s	CAP, CERAMIC 0.47MF X7R 1608

(C BOARD)

Ref. No. or Q'ty	Part No.	SP	Description
C913	1-112-780-11	s	CAP, CERAMIC 0.47MF X7R 1608
C914	1-112-774-11	s	CAP, CERAMIC 470PF X7R 1005
C916	1-164-004-91	s	CAP, CERAMIC 100000PF B (2012)
C917	1-164-004-91	s	CAP, CERAMIC 100000PF B (2012)
C918	1-137-942-21	s	CAP, ELECT 47MF (6.3X5.4)
C919	1-137-942-21	s	CAP, ELECT 47MF (6.3X5.4)
C920	1-164-004-91	s	CAP, CERAMIC 100000PF B (2012)
C921	1-164-004-91	s	CAP, CERAMIC 100000PF B (2012)
C922	1-137-942-21	s	CAP, ELECT 47MF (6.3X5.4)
C923	1-164-004-91	s	CAP, CERAMIC 100000PF B (2012)
C924	1-164-004-91	s	CAP, CERAMIC 100000PF B (2012)
C925	1-164-004-91	s	CAP, CERAMIC 100000PF B (2012)
C926	1-164-004-91	s	CAP, CERAMIC 100000PF B (2012)
C927	1-164-004-91	s	CAP, CERAMIC 100000PF B (2012)
C928	1-137-942-21	s	CAP, ELECT 47MF (6.3X5.4)
C929	1-164-004-91	s	CAP, CERAMIC 100000PF B (2012)
C930	1-164-004-91	s	CAP, CERAMIC 100000PF B (2012)
C931	1-164-004-91	s	CAP, CERAMIC 100000PF B (2012)
C932	1-164-004-91	s	CAP, CERAMIC 100000PF B (2012)
C933	1-164-004-91	s	CAP, CERAMIC 100000PF B (2012)
C934	1-112-777-11	s	CAP, CERAMIC 0.01MF X7R 1005
C935	1-164-004-91	s	CAP, CERAMIC 100000PF B (2012)
C936	1-112-777-11	s	CAP, CERAMIC 0.01MF X7R 1005
C937	1-137-942-21	s	CAP, ELECT 47MF (6.3X5.4)
C938	1-100-907-11	s	CAP,CERAMIC 0.1MF X7R 1005
C939	1-164-004-91	s	CAP, CERAMIC 100000PF B (2012)
C940	1-164-004-91	s	CAP, CERAMIC 100000PF B (2012)
C941	1-128-589-21	s	CAP, CHIP ELECT 47MF
C942	1-112-194-21	s	CAP, CHIP ELECT 10MF
C943	1-164-004-91	s	CAP, CERAMIC 100000PF B (2012)
C944	1-112-194-21	s	CAP, CHIP ELECT 10MF
C945	1-100-916-11	s	CAP, CERAMIC 0.1MF X7R 1005
C946	1-128-589-21	s	CAP, CHIP ELECT 47MF
C948	1-100-916-11	s	CAP, CERAMIC 0.1MF X7R 1005
CN100	1-784-254-21	s	CONNECTOR 10P
CN101	1-764-782-51	s	HOUSING, CONNECTOR 24P
CN700	1-778-451-31	s	CONNECTOR, FFC/FPC(ZIF) AN 50P
CN800	1-816-126-61	s	CONNECTOR, FFC/FPC
CN900	1-778-451-31	s	CONNECTOR, FFC/FPC(ZIF) AN 50P
D700	8-719-081-97	s	DIODE MMDL914T1
D701	8-719-988-61	s	DIODE 1SS355TE-17
D702	8-719-081-97	s	DIODE MMDL914T1
D800	8-719-081-97	s	DIODE MMDL914T1
D801	8-719-081-97	s	DIODE MMDL914T1
D900	8-719-081-97	s	DIODE MMDL914T1
D901	8-719-081-97	s	DIODE MMDL914T1
ET100	1-780-336-11	s	EARTH TERMINAL
ET101	1-780-336-11	s	EARTH TERMINAL
ET102	1-780-336-11	s	EARTH TERMINAL
ET103	1-780-336-11	s	EARTH TERMINAL
ET104	1-780-336-11	s	EARTH TERMINAL
FB100	1-469-083-21	s	INDUCTOR, FERRITE BEAD (1005)
FB101	1-469-083-21	s	INDUCTOR, FERRITE BEAD (1005)
FB102	1-469-083-21	s	INDUCTOR, FERRITE BEAD (1005)
FB103	1-469-083-21	s	INDUCTOR, FERRITE BEAD (1005)
FB104	1-469-083-21	s	INDUCTOR, FERRITE BEAD (1005)
FB200	1-400-499-21	s	FERRITE, EMI (SMD)
FB201	1-400-499-21	s	FERRITE, EMI (SMD)

(C BOARD)

Ref. No. or Q'ty	Part No.	SP	Description
FB300	1-414-921-21	s	INDUCTOR, FERRITE BEAD
FB301	1-414-921-21	s	INDUCTOR, FERRITE BEAD
FB302	1-414-921-21	s	INDUCTOR, FERRITE BEAD
FB303	1-414-921-21	s	INDUCTOR, FERRITE BEAD
FB304	1-400-150-21	s	FERRITE, EMI (SMD) (4516)
FB305	1-400-150-21	s	FERRITE, EMI (SMD) (4516)
FB306	1-400-150-21	s	FERRITE, EMI (SMD) (4516)
FB307	1-414-921-21	s	INDUCTOR, FERRITE BEAD
FB400	1-414-921-21	s	INDUCTOR, FERRITE BEAD
FB401	1-414-921-21	s	INDUCTOR, FERRITE BEAD
FB402	1-414-921-21	s	INDUCTOR, FERRITE BEAD
FB403	1-414-921-21	s	INDUCTOR, FERRITE BEAD
FB404	1-414-921-21	s	INDUCTOR, FERRITE BEAD
FB405	1-400-150-21	s	FERRITE, EMI (SMD) (4516)
FB406	1-400-150-21	s	FERRITE, EMI (SMD) (4516)
FB407	1-400-150-21	s	FERRITE, EMI (SMD) (4516)
FB500	1-469-379-21	s	FERRITE, EMI (SMD) (2012)
FB501	1-400-150-21	s	FERRITE, EMI (SMD) (4516)
FB502	1-400-150-21	s	FERRITE, EMI (SMD) (4516)
FB503	1-400-150-21	s	FERRITE, EMI (SMD) (4516)
FB600	1-469-379-21	s	FERRITE, EMI (SMD) (2012)
FB601	1-400-150-21	s	FERRITE, EMI (SMD) (4516)
FB602	1-400-150-21	s	FERRITE, EMI (SMD) (4516)
FB700	1-414-921-21	s	INDUCTOR, FERRITE BEAD
FB701	1-414-921-21	s	INDUCTOR, FERRITE BEAD
FB800	1-414-921-21	s	INDUCTOR, FERRITE BEAD
FB801	1-414-921-21	s	INDUCTOR, FERRITE BEAD
FB802	1-414-921-21	s	INDUCTOR, FERRITE BEAD
FB900	1-414-921-21	s	INDUCTOR, FERRITE BEAD
FB901	1-414-921-21	s	INDUCTOR, FERRITE BEAD
FL100	1-234-835-11	s	FILTER, COMMON MODE
FL101	1-411-957-21	s	FILTER, COMMON MODE
FL102	1-411-957-21	s	FILTER, COMMON MODE
FL103	1-234-835-11	s	FILTER, COMMON MODE
IC100	6-703-225-01	s	IC S-80928CNMC-G8YT2G
IC200	6-708-739-01	s	IC THC63LVD104S-T
IC201	6-708-739-01	s	IC THC63LVD104S-T
IC300	6-708-625-01	s	IC CXD9859GP
IC301	6-710-121-01	s	IC M24256-BWMN6TP(A)
IC302	8-759-456-26	s	IC 74LCX541MTCX
IC303	6-704-843-01	s	IC AIC1117A-PEJTR
IC304	6-704-843-01	s	IC AIC1117A-PEJTR
IC400	6-708-625-01	s	IC CXD9859GP
IC401	6-710-121-01	s	IC M24256-BWMN6TP(A)
IC402	8-759-456-26	s	IC 74LCX541MTCX
IC403	6-704-843-01	s	IC AIC1117A-PEJTR
IC404	6-704-843-01	s	IC AIC1117A-PEJTR
IC500	6-707-822-01	s	IC EM6A9320BI-5MG
IC502	6-710-456-01	s	IC BD3533HFN-TR
IC600	6-707-822-01	s	IC EM6A9320BI-5MG
IC602	6-710-456-01	s	IC BD3533HFN-TR
IC700	8-753-255-59	s	IC CXA7007R-T6
IC701	8-753-255-59	s	IC CXA7007R-T6
IC702	8-759-066-56	s	IC TA75W393FU-TE12R
IC703	6-705-025-01	s	IC PQ20WZ1UJ00H
IC704	6-703-225-01	s	IC S-80928CNMC-G8YT2G
IC705	6-704-953-01	s	IC AIC1117A-33PYJTR
IC800	8-753-255-59	s	IC CXA7007R-T6
IC801	8-753-255-59	s	IC CXA7007R-T6

(C BOARD)

Ref. No. or Q'ty	Part No.	SP	Description
IC802	6-705-025-01	s	IC PQ20WZ1UJ00H
IC803	6-703-225-01	s	IC S-80928CNMC-G8YT2G
IC804	6-704-953-01	s	IC AIC1117A-33PYJTR
IC806	6-703-225-01	s	IC S-80928CNMC-G8YT2G
IC900	8-753-255-59	s	IC CXA7007R-T6
IC901	8-753-255-59	s	IC CXA7007R-T6
IC902	6-705-025-01	s	IC PQ20WZ1UJ00H
IC903	6-703-225-01	s	IC S-80928CNMC-G8YT2G
IC904	6-704-953-01	s	IC AIC1117A-33PYJTR
L700	1-469-522-91	s	INDUCTOR 1.0UH (NLFV25)
L701	1-469-522-91	s	INDUCTOR 1.0UH (NLFV25)
L702	1-469-522-91	s	INDUCTOR 1.0UH (NLFV25)
L703	1-469-522-91	s	INDUCTOR 1.0UH (NLFV25)
L704	1-410-381-41	s	CHIP INDUCTOR 10UH
L800	1-469-522-91	s	INDUCTOR 1.0UH (NLFV25)
L801	1-469-522-91	s	INDUCTOR 1.0UH (NLFV25)
L802	1-469-522-91	s	INDUCTOR 1.0UH (NLFV25)
L803	1-469-522-91	s	INDUCTOR 1.0UH (NLFV25)
L804	1-410-381-41	s	CHIP INDUCTOR 10UH
L900	1-469-522-91	s	INDUCTOR 1.0UH (NLFV25)
L901	1-469-522-91	s	INDUCTOR 1.0UH (NLFV25)
L902	1-469-522-91	s	INDUCTOR 1.0UH (NLFV25)
L903	1-469-522-91	s	INDUCTOR 1.0UH (NLFV25)
L904	1-410-381-41	s	CHIP INDUCTOR 10UH
Q100	8-729-602-36	s	TRANSISTOR 2SA1602TP-1EF
Q101	8-729-602-36	s	TRANSISTOR 2SA1602TP-1EF
Q300	8-729-013-28	s	TRANSISTOR HN1B01FU-TE85R
Q400	8-729-013-28	s	TRANSISTOR HN1B01FU-TE85R
Q700	8-729-013-28	s	TRANSISTOR HN1B01FU-TE85R
Q701	8-729-029-14	s	TRANSISTOR DTC144EUA-T106
Q702	8-729-013-28	s	TRANSISTOR HN1B01FU-TE85R
Q703	8-729-056-67	s	TRANSISTOR SSM6P05FU(TE85R)
Q704	8-729-602-36	s	TRANSISTOR 2SA1602TP-1EF
Q705	8-729-120-28	s	TRANSISTOR 2SC3052EF-T1-LEF
Q706	8-729-013-24	s	TRANSISTOR HN1C01FU-TE85R
Q800	8-729-013-28	s	TRANSISTOR HN1B01FU-TE85R
Q801	8-729-029-14	s	TRANSISTOR DTC144EUA-T106
Q802	8-729-013-28	s	TRANSISTOR HN1B01FU-TE85R
Q803	8-729-056-67	s	TRANSISTOR SSM6P05FU(TE85R)
Q804	8-729-013-24	s	TRANSISTOR HN1C01FU-TE85R
Q900	8-729-013-28	s	TRANSISTOR HN1B01FU-TE85R
Q901	8-729-029-14	s	TRANSISTOR DTC144EUA-T106
Q902	8-729-013-28	s	TRANSISTOR HN1B01FU-TE85R
Q903	8-729-056-67	s	TRANSISTOR SSM6P05FU(TE85R)
Q904	8-729-013-24	s	TRANSISTOR HN1C01FU-TE85R
R102	1-218-941-11	s	RES, CHIP 100 (1005)
R103	1-218-937-81	s	RES, CHIP 47
R104	1-218-937-81	s	RES, CHIP 47
R105	1-218-960-81	s	RES, CHIP 3.9K
R106	1-218-953-81	s	RES, CHIP 1.0K
R111	1-218-937-81	s	RES, CHIP 47
R112	1-218-957-81	s	RES, CHIP 2.2K
R113	1-218-973-81	s	RES, CHIP 47K
R114	1-218-968-81	s	RES, CHIP 18K
R115	1-218-973-81	s	RES, CHIP 47K
R200	1-218-941-11	s	RES, CHIP 100 (1005)
R201	1-218-941-11	s	RES, CHIP 100 (1005)
R202	1-218-941-11	s	RES, CHIP 100 (1005)

(C BOARD)

Ref. No. or Q'ty	Part No.	SP	Description
R203	1-218-941-11	s	RES, CHIP 100 (1005)
R204	1-218-941-11	s	RES, CHIP 100 (1005)
R205	1-218-941-11	s	RES, CHIP 100 (1005)
R206	1-218-941-11	s	RES, CHIP 100 (1005)
R207	1-218-941-11	s	RES, CHIP 100 (1005)
R208	1-218-941-11	s	RES, CHIP 100 (1005)
R209	1-218-941-11	s	RES, CHIP 100 (1005)
R210	1-218-941-11	s	RES, CHIP 100 (1005)
R211	1-218-941-11	s	RES, CHIP 100 (1005)
R212	1-218-990-81	s	CONDUCTOR, CHIP (1005)
R213	1-218-990-81	s	CONDUCTOR, CHIP (1005)
R214	1-218-990-81	s	CONDUCTOR, CHIP (1005)
R215	1-218-990-81	s	CONDUCTOR, CHIP (1005)
R216	1-218-990-81	s	CONDUCTOR, CHIP (1005)
R218	1-218-990-81	s	CONDUCTOR, CHIP (1005)
R219	1-218-959-81	s	RES, CHIP 3.3K
R220	1-218-959-81	s	RES, CHIP 3.3K
R221	1-218-935-81	s	RES, CHIP 33
R222	1-218-935-81	s	RES, CHIP 33
R224	1-218-935-81	s	RES, CHIP 33
R225	1-218-977-81	s	RES, CHIP 100K
R227	1-218-935-81	s	RES, CHIP 33
R229	1-218-977-81	s	RES, CHIP 100K
R231	1-218-959-81	s	RES, CHIP 3.3K
R232	1-218-959-81	s	RES, CHIP 3.3K
R233	1-218-937-81	s	RES, CHIP 47
R234	1-218-959-81	s	RES, CHIP 3.3K
R235	1-218-959-81	s	RES, CHIP 3.3K
R236	1-218-937-81	s	RES, CHIP 47
R237	1-218-935-81	s	RES, CHIP 33
R238	1-218-935-81	s	RES, CHIP 33
R239	1-218-935-81	s	RES, CHIP 33
R240	1-218-935-81	s	RES, CHIP 33
R241	1-218-937-81	s	RES, CHIP 47
R242	1-218-937-81	s	RES, CHIP 47
R300	1-218-935-81	s	RES, CHIP 33
R301	1-218-939-81	s	RES, CHIP 68
R302	1-218-935-81	s	RES, CHIP 33
R303	1-218-933-81	s	RES, CHIP 22
R304	1-218-929-81	s	RES, CHIP 10
R305	1-218-929-81	s	RES, CHIP 10
R306	1-218-933-81	s	RES, CHIP 22
R307	1-218-969-81	s	RES, CHIP 22K
R308	1-218-969-81	s	RES, CHIP 22K
R309	1-218-973-81	s	RES, CHIP 47K
R310	1-218-965-81	s	RES, CHIP 10K
R312	1-218-953-81	s	RES, CHIP 1.0K
R313	1-218-973-81	s	RES, CHIP 47K
R314	1-218-929-81	s	RES, CHIP 10
R315	1-218-929-81	s	RES, CHIP 10
R316	1-218-959-81	s	RES, CHIP 3.3K
R317	1-218-953-81	s	RES, CHIP 1.0K
R318	1-218-973-81	s	RES, CHIP 47K
R319	1-218-990-81	s	CONDUCTOR, CHIP (1005)
R320	1-218-929-81	s	RES, CHIP 10
R321	1-218-929-81	s	RES, CHIP 10
R322	1-218-929-81	s	RES, CHIP 10
R323	1-218-933-81	s	RES, CHIP 22
R324	1-218-961-81	s	RES, CHIP 4.7K

(C BOARD)

Ref. No. or Q'ty	Part No.	SP	Description
R325	1-218-937-81	s	RES, CHIP 47
R326	1-218-953-81	s	RES, CHIP 1.0K
R327	1-218-933-81	s	RES, CHIP 22
R328	1-218-990-81	s	CONDUCTOR, CHIP (1005)
R329	1-218-929-81	s	RES, CHIP 10
R330	1-218-961-81	s	RES, CHIP 4.7K
R331	1-218-937-81	s	RES, CHIP 47
R332	1-218-990-81	s	CONDUCTOR, CHIP (1005)
R333	1-218-973-81	s	RES, CHIP 47K
R334	1-218-953-81	s	RES, CHIP 1.0K
R335	1-218-953-81	s	RES, CHIP 1.0K
R336	1-218-929-81	s	RES, CHIP 10
R337	1-218-929-81	s	RES, CHIP 10
R338	1-218-929-81	s	RES, CHIP 10
R339	1-218-929-81	s	RES, CHIP 10
R340	1-218-929-81	s	RES, CHIP 10
R341	1-218-929-81	s	RES, CHIP 10
R342	1-218-929-81	s	RES, CHIP 10
R343	1-218-937-81	s	RES, CHIP 47
R345	1-208-879-81	s	RES, CHIP 470 (1005)
R346	1-218-941-11	s	RES, CHIP 100 (1005)
R347	1-218-929-81	s	RES, CHIP 10
R348	1-218-929-81	s	RES, CHIP 10
R349	1-218-929-81	s	RES, CHIP 10
R350	1-218-929-81	s	RES, CHIP 10
R351	1-218-929-81	s	RES, CHIP 10
R352	1-218-929-81	s	RES, CHIP 10
R353	1-218-929-81	s	RES, CHIP 10
R354	1-218-990-81	s	CONDUCTOR, CHIP (1005)
R355	1-218-965-81	s	RES, CHIP 10K
R356	1-218-941-81	s	RES, CHIP 100
R357	1-218-990-81	s	CONDUCTOR, CHIP (1005)
R358	1-218-990-81	s	CONDUCTOR, CHIP (1005)
R359	1-218-990-81	s	CONDUCTOR, CHIP (1005)
R360	1-218-990-81	s	CONDUCTOR, CHIP (1005)
R361	1-218-990-81	s	CONDUCTOR, CHIP (1005)
R362	1-218-990-81	s	CONDUCTOR, CHIP (1005)
R363	1-218-990-81	s	CONDUCTOR, CHIP (1005)
R364	1-218-990-81	s	CONDUCTOR, CHIP (1005)
R365	1-208-879-81	s	RES, CHIP 470 (1005)
R366	1-218-941-11	s	RES, CHIP 100 (1005)
R400	1-218-935-81	s	RES, CHIP 33
R401	1-218-935-81	s	RES, CHIP 33
R402	1-218-935-81	s	RES, CHIP 33
R403	1-218-933-81	s	RES, CHIP 22
R404	1-218-933-81	s	RES, CHIP 22
R405	1-218-969-81	s	RES, CHIP 22K
R406	1-218-969-81	s	RES, CHIP 22K
R407	1-218-973-81	s	RES, CHIP 47K
R408	1-218-965-81	s	RES, CHIP 10K
R409	1-218-973-81	s	RES, CHIP 47K
R410	1-218-965-81	s	RES, CHIP 10K
R411	1-218-953-81	s	RES, CHIP 1.0K
R412	1-218-959-81	s	RES, CHIP 3.3K
R413	1-218-953-81	s	RES, CHIP 1.0K
R414	1-218-973-81	s	RES, CHIP 47K
R416	1-218-929-81	s	RES, CHIP 10
R417	1-218-929-81	s	RES, CHIP 10
R418	1-218-929-81	s	RES, CHIP 10

(C BOARD)

Ref. No. or Q'ty	Part No.	SP	Description
R419	1-218-933-81	s	RES, CHIP 22
R420	1-218-961-81	s	RES, CHIP 4.7K
R421	1-218-937-81	s	RES, CHIP 47
R422	1-218-953-81	s	RES, CHIP 1.0K
R423	1-218-933-81	s	RES, CHIP 22
R424	1-218-990-81	s	CONDUCTOR, CHIP (1005)
R425	1-218-929-81	s	RES, CHIP 10
R426	1-218-961-81	s	RES, CHIP 4.7K
R427	1-218-937-81	s	RES, CHIP 47
R429	1-218-973-81	s	RES, CHIP 47K
R430	1-218-953-81	s	RES, CHIP 1.0K
R431	1-218-953-81	s	RES, CHIP 1.0K
R432	1-218-929-81	s	RES, CHIP 10
R433	1-218-929-81	s	RES, CHIP 10
R435	1-218-929-81	s	RES, CHIP 10
R436	1-218-937-81	s	RES, CHIP 47
R437	1-218-929-81	s	RES, CHIP 10
R438	1-218-929-81	s	RES, CHIP 10
R439	1-218-929-81	s	RES, CHIP 10
R440	1-218-929-81	s	RES, CHIP 10
R441	1-218-929-81	s	RES, CHIP 10
R442	1-208-879-81	s	RES, CHIP 470 (1005)
R443	1-218-941-11	s	RES, CHIP 100 (1005)
R444	1-218-929-81	s	RES, CHIP 10
R445	1-218-929-81	s	RES, CHIP 10
R446	1-218-929-81	s	RES, CHIP 10
R447	1-218-965-81	s	RES, CHIP 10K
R448	1-218-941-81	s	RES, CHIP 100
R449	1-218-990-81	s	CONDUCTOR, CHIP (1005)
R450	1-218-990-81	s	CONDUCTOR, CHIP (1005)
R451	1-218-990-81	s	CONDUCTOR, CHIP (1005)
R452	1-218-990-81	s	CONDUCTOR, CHIP (1005)
R453	1-218-990-81	s	CONDUCTOR, CHIP (1005)
R454	1-218-990-81	s	CONDUCTOR, CHIP (1005)
R455	1-218-990-81	s	CONDUCTOR, CHIP (1005)
R456	1-218-990-81	s	CONDUCTOR, CHIP (1005)
R457	1-208-879-81	s	RES, CHIP 470 (1005)
R458	1-218-941-11	s	RES, CHIP 100 (1005)
R500	1-218-941-81	s	RES, CHIP 100
R501	1-218-933-81	s	RES, CHIP 22
R502	1-218-933-81	s	RES, CHIP 22
R503	1-218-933-81	s	RES, CHIP 22
R504	1-218-933-81	s	RES, CHIP 22
R505	1-218-933-81	s	RES, CHIP 22
R506	1-218-933-81	s	RES, CHIP 22
R507	1-218-933-81	s	RES, CHIP 22
R508	1-218-933-81	s	RES, CHIP 22
R509	1-218-933-81	s	RES, CHIP 22
R510	1-218-933-81	s	RES, CHIP 22
R511	1-218-933-81	s	RES, CHIP 22
R512	1-218-933-81	s	RES, CHIP 22
R513	1-218-933-81	s	RES, CHIP 22
R514	1-218-933-81	s	RES, CHIP 22
R515	1-218-933-81	s	RES, CHIP 22
R517	1-218-941-81	s	RES, CHIP 100
R518	1-218-941-81	s	RES, CHIP 100
R519	1-218-941-81	s	RES, CHIP 100
R520	1-218-941-81	s	RES, CHIP 100
R521	1-216-295-91	s	CONDUCTOR, CHIP (2012)

(C BOARD)

Ref. No. or Q'ty	Part No.	SP	Description
R522	1-218-990-81	s	CONDUCTOR, CHIP (1005)
R523	1-218-937-81	s	RES, CHIP 47
R524	1-218-937-81	s	RES, CHIP 47
R525	1-218-937-81	s	RES, CHIP 47
R526	1-218-937-81	s	RES, CHIP 47
R527	1-218-937-81	s	RES, CHIP 47
R528	1-218-937-81	s	RES, CHIP 47
R529	1-218-937-81	s	RES, CHIP 47
R530	1-218-937-81	s	RES, CHIP 47
R531	1-218-937-81	s	RES, CHIP 47
R532	1-218-933-81	s	RES, CHIP 22
R533	1-218-933-81	s	RES, CHIP 22
R534	1-216-295-91	s	CONDUCTOR, CHIP (2012)
R535	1-218-945-11	s	RES, CHIP 220 (1005)
R600	1-218-941-81	s	RES, CHIP 100
R601	1-218-933-81	s	RES, CHIP 22
R602	1-218-933-81	s	RES, CHIP 22
R603	1-218-933-81	s	RES, CHIP 22
R604	1-218-933-81	s	RES, CHIP 22
R605	1-218-933-81	s	RES, CHIP 22
R606	1-218-933-81	s	RES, CHIP 22
R607	1-218-933-81	s	RES, CHIP 22
R608	1-218-933-81	s	RES, CHIP 22
R609	1-218-933-81	s	RES, CHIP 22
R610	1-218-933-81	s	RES, CHIP 22
R611	1-218-933-81	s	RES, CHIP 22
R612	1-218-933-81	s	RES, CHIP 22
R613	1-218-933-81	s	RES, CHIP 22
R614	1-216-295-91	s	CONDUCTOR, CHIP (2012)
R615	1-218-933-81	s	RES, CHIP 22
R616	1-218-933-81	s	RES, CHIP 22
R617	1-218-933-81	s	RES, CHIP 22
R618	1-218-933-81	s	RES, CHIP 22
R620	1-216-295-91	s	CONDUCTOR, CHIP (2012)
R621	1-218-941-81	s	RES, CHIP 100
R622	1-218-941-81	s	RES, CHIP 100
R623	1-218-941-81	s	RES, CHIP 100
R624	1-218-941-81	s	RES, CHIP 100
R625	1-218-990-81	s	CONDUCTOR, CHIP (1005)
R626	1-218-937-81	s	RES, CHIP 47
R627	1-218-937-81	s	RES, CHIP 47
R628	1-218-937-81	s	RES, CHIP 47
R629	1-218-937-81	s	RES, CHIP 47
R630	1-218-937-81	s	RES, CHIP 47
R631	1-218-937-81	s	RES, CHIP 47
R632	1-218-937-81	s	RES, CHIP 47
R633	1-218-937-81	s	RES, CHIP 47
R634	1-218-937-81	s	RES, CHIP 47
R635	1-218-945-11	s	RES, CHIP 220 (1005)
R700	1-218-965-81	s	RES, CHIP 10K
R701	1-218-990-81	s	CONDUCTOR, CHIP (1005)
R703	1-218-943-81	s	RES, CHIP 150
R704	1-218-943-81	s	RES, CHIP 150
R705	1-208-707-81	s	RES, METAL FILM CHIP 10K(1005)
R706	1-218-933-81	s	RES, CHIP 22
R707	1-218-977-81	s	RES, CHIP 100K
R708	1-208-707-81	s	RES, METAL FILM CHIP 10K(1005)
R709	1-218-933-81	s	RES, CHIP 22
R710	1-218-965-81	s	RES, CHIP 10K

(C BOARD)

Ref. No. or Q'ty	Part No.	SP	Description
R711	1-218-933-81	s	RES, CHIP 22
R712	1-218-933-81	s	RES, CHIP 22
R713	1-218-933-81	s	RES, CHIP 22
R714	1-218-941-81	s	RES, CHIP 100
R715	1-218-933-81	s	RES, CHIP 22
R716	1-218-941-81	s	RES, CHIP 100
R717	1-218-941-81	s	RES, CHIP 100
R718	1-218-941-81	s	RES, CHIP 100
R719	1-218-990-81	s	CONDUCTOR, CHIP (1005)
R720	1-218-990-81	s	CONDUCTOR, CHIP (1005)
R722	1-218-965-81	s	RES, CHIP 10K
R727	1-218-961-81	s	RES, CHIP 4.7K
R731	1-218-961-81	s	RES, CHIP 4.7K
R732	1-218-961-81	s	RES, CHIP 4.7K
R733	1-218-953-81	s	RES, CHIP 1.0K
R734	1-218-967-81	s	RES, CHIP 15K
R735	1-218-953-81	s	RES, CHIP 1.0K
R736	1-218-940-81	s	RES, CHIP 82
R737	1-218-940-81	s	RES, CHIP 82
R738	1-218-940-81	s	RES, CHIP 82
R739	1-218-940-81	s	RES, CHIP 82
R740	1-218-940-81	s	RES, CHIP 82
R741	1-218-940-81	s	RES, CHIP 82
R742	1-218-990-81	s	CONDUCTOR, CHIP (1005)
R743	1-218-940-81	s	RES, CHIP 82
R744	1-218-940-81	s	RES, CHIP 82
R745	1-218-940-81	s	RES, CHIP 82
R746	1-218-940-81	s	RES, CHIP 82
R747	1-218-940-81	s	RES, CHIP 82
R748	1-218-940-81	s	RES, CHIP 82
R749	1-218-941-81	s	RES, CHIP 100
R750	1-218-940-81	s	RES, CHIP 82
R751	1-218-940-81	s	RES, CHIP 82
R752	1-218-940-81	s	RES, CHIP 82
R753	1-218-940-81	s	RES, CHIP 82
R754	1-218-940-81	s	RES, CHIP 82
R755	1-218-940-81	s	RES, CHIP 82
R756	1-218-940-81	s	RES, CHIP 82
R757	1-218-940-81	s	RES, CHIP 82
R758	1-218-940-81	s	RES, CHIP 82
R759	1-218-940-81	s	RES, CHIP 82
R760	1-218-940-81	s	RES, CHIP 82
R761	1-218-940-81	s	RES, CHIP 82
R762	1-218-957-81	s	RES, CHIP 2.2K
R763	1-218-959-81	s	RES, CHIP 3.3K
R764	1-218-953-81	s	RES, CHIP 1.0K
R765	1-218-957-81	s	RES, CHIP 2.2K
R766	1-218-969-81	s	RES, CHIP 22K
R767	1-218-965-81	s	RES, CHIP 10K
R768	1-218-929-81	s	RES, CHIP 10
R769	1-218-929-81	s	RES, CHIP 10
R770	1-218-969-81	s	RES, CHIP 22K
R771	1-218-970-81	s	RES, CHIP 27K
R772	1-218-977-81	s	RES, CHIP 100K
R773	1-218-965-81	s	RES, CHIP 10K
R774	1-218-990-81	s	CONDUCTOR, CHIP (1005)
R775	1-218-977-81	s	RES, CHIP 100K
R776	1-218-965-81	s	RES, CHIP 10K
R777	1-218-990-81	s	CONDUCTOR, CHIP (1005)

(C BOARD)

Ref. No. or Q'ty	Part No.	SP	Description
R779	1-218-961-81	s	RES, CHIP 4.7K
R780	1-218-969-81	s	RES, CHIP 22K
R781	1-218-969-81	s	RES, CHIP 22K
R782	1-218-953-81	s	RES, CHIP 1.0K
R783	1-220-221-91	s	RES,SQUARE TYPE CHIP 100(4532)
R784	1-208-703-11	s	RES, CHIP 6.8K (1005)
R785	1-218-953-81	s	RES, CHIP 1.0K
R786	1-208-721-11	s	RES, CHIP 39K (1005)
R787	1-208-889-81	s	RES, CHIP 1.2K (1005)
R788	1-218-957-81	s	RES, CHIP 2.2K
R789	1-218-965-81	s	RES, CHIP 10K
R790	1-218-977-81	s	RES, CHIP 100K
R791	1-218-973-81	s	RES, CHIP 47K
R792	1-218-973-81	s	RES, CHIP 47K
R793	1-218-977-81	s	RES, CHIP 100K
R794	1-216-864-91	s	CONDUCTOR, CHIP (1608)
R795	1-216-864-91	s	CONDUCTOR, CHIP (1608)
R796	1-218-941-81	s	RES, CHIP 100
R797	1-218-965-81	s	RES, CHIP 10K
R798	1-218-965-81	s	RES, CHIP 10K
R799	1-218-929-81	s	RES, CHIP 10
R800	1-218-965-81	s	RES, CHIP 10K
R801	1-218-990-81	s	CONDUCTOR, CHIP (1005)
R803	1-218-933-81	s	RES, CHIP 22
R804	1-218-943-81	s	RES, CHIP 150
R805	1-208-707-81	s	RES, METAL FILM CHIP 10K(1005)
R806	1-218-933-81	s	RES, CHIP 22
R807	1-218-977-81	s	RES, CHIP 100K
R808	1-208-707-81	s	RES, METAL FILM CHIP 10K(1005)
R809	1-218-933-81	s	RES, CHIP 22
R810	1-218-965-81	s	RES, CHIP 10K
R811	1-218-933-81	s	RES, CHIP 22
R812	1-218-933-81	s	RES, CHIP 22
R813	1-218-933-81	s	RES, CHIP 22
R814	1-218-941-81	s	RES, CHIP 100
R815	1-218-933-81	s	RES, CHIP 22
R816	1-218-941-81	s	RES, CHIP 100
R817	1-218-941-81	s	RES, CHIP 100
R818	1-218-941-81	s	RES, CHIP 100
R819	1-218-990-81	s	CONDUCTOR, CHIP (1005)
R820	1-218-990-81	s	CONDUCTOR, CHIP (1005)
R822	1-218-965-81	s	RES, CHIP 10K
R824	1-218-961-81	s	RES, CHIP 4.7K
R828	1-218-961-81	s	RES, CHIP 4.7K
R830	1-218-961-81	s	RES, CHIP 4.7K
R833	1-218-953-81	s	RES, CHIP 1.0K
R834	1-218-967-81	s	RES, CHIP 15K
R835	1-218-953-81	s	RES, CHIP 1.0K
R836	1-218-940-81	s	RES, CHIP 82
R837	1-218-940-81	s	RES, CHIP 82
R838	1-218-940-81	s	RES, CHIP 82
R839	1-218-940-81	s	RES, CHIP 82
R840	1-218-940-81	s	RES, CHIP 82
R841	1-218-940-81	s	RES, CHIP 82
R842	1-218-990-81	s	CONDUCTOR, CHIP (1005)
R843	1-218-940-81	s	RES, CHIP 82
R844	1-218-940-81	s	RES, CHIP 82
R845	1-218-940-81	s	RES, CHIP 82
R846	1-218-940-81	s	RES, CHIP 82

(C BOARD)

Ref. No. or Q'ty	Part No.	SP	Description
R847	1-218-940-81	s	RES, CHIP 82
R848	1-218-940-81	s	RES, CHIP 82
R849	1-218-941-81	s	RES, CHIP 100
R850	1-218-940-81	s	RES, CHIP 82
R851	1-218-940-81	s	RES, CHIP 82
R852	1-218-940-81	s	RES, CHIP 82
R853	1-218-940-81	s	RES, CHIP 82
R854	1-218-940-81	s	RES, CHIP 82
R855	1-218-940-81	s	RES, CHIP 82
R856	1-218-940-81	s	RES, CHIP 82
R857	1-218-940-81	s	RES, CHIP 82
R858	1-218-940-81	s	RES, CHIP 82
R859	1-218-940-81	s	RES, CHIP 82
R860	1-218-940-81	s	RES, CHIP 82
R861	1-218-940-81	s	RES, CHIP 82
R862	1-218-957-81	s	RES, CHIP 2.2K
R863	1-218-959-81	s	RES, CHIP 3.3K
R864	1-218-953-81	s	RES, CHIP 1.0K
R865	1-218-957-81	s	RES, CHIP 2.2K
R866	1-218-969-81	s	RES, CHIP 22K
R867	1-218-965-81	s	RES, CHIP 10K
R868	1-218-929-81	s	RES, CHIP 10
R869	1-218-929-81	s	RES, CHIP 10
R870	1-218-969-81	s	RES, CHIP 22K
R871	1-218-970-81	s	RES, CHIP 27K
R872	1-218-990-81	s	CONDUCTOR, CHIP (1005)
R874	1-218-961-81	s	RES, CHIP 4.7K
R875	1-218-969-81	s	RES, CHIP 22K
R876	1-218-969-81	s	RES, CHIP 22K
R877	1-218-953-81	s	RES, CHIP 1.0K
R878	1-220-221-91	s	RES,SQUARE TYPE CHIP 100(4532)
R879	1-208-703-11	s	RES, CHIP 6.8K (1005)
R880	1-218-953-81	s	RES, CHIP 1.0K
R881	1-208-721-11	s	RES, CHIP 39K (1005)
R882	1-208-889-81	s	RES, CHIP 1.2K (1005)
R883	1-218-957-81	s	RES, CHIP 2.2K
R884	1-216-864-91	s	CONDUCTOR, CHIP (1608)
R885	1-216-864-91	s	CONDUCTOR, CHIP (1608)
R886	1-218-965-81	s	RES, CHIP 10K
R887	1-218-965-81	s	RES, CHIP 10K
R888	1-218-929-81	s	RES, CHIP 10
R889	1-218-990-81	s	CONDUCTOR, CHIP (1005)
R891	1-218-990-81	s	CONDUCTOR, CHIP (1005)
R896	1-218-965-81	s	RES, CHIP 10K
R897	1-218-990-81	s	CONDUCTOR, CHIP (1005)
R898	1-218-929-81	s	RES, CHIP 10
R899	1-218-929-81	s	RES, CHIP 10
R900	1-218-965-81	s	RES, CHIP 10K
R901	1-218-990-81	s	CONDUCTOR, CHIP (1005)
R903	1-218-943-81	s	RES, CHIP 150
R904	1-218-943-81	s	RES, CHIP 150
R905	1-208-707-81	s	RES, METAL FILM CHIP 10K(1005)
R906	1-218-933-81	s	RES, CHIP 22
R907	1-218-977-81	s	RES, CHIP 100K
R908	1-208-707-81	s	RES, METAL FILM CHIP 10K(1005)
R909	1-218-933-81	s	RES, CHIP 22
R910	1-218-965-81	s	RES, CHIP 10K
R911	1-218-933-81	s	RES, CHIP 22
R912	1-218-933-81	s	RES, CHIP 22

(C BOARD)

Ref. No. or Q'ty	Part No.	SP	Description
R913	1-218-933-81	s	RES, CHIP 22
R914	1-218-941-81	s	RES, CHIP 100
R915	1-218-933-81	s	RES, CHIP 22
R916	1-218-941-81	s	RES, CHIP 100
R917	1-218-941-81	s	RES, CHIP 100
R918	1-218-941-81	s	RES, CHIP 100
R919	1-218-990-81	s	CONDUCTOR, CHIP (1005)
R920	1-218-990-81	s	CONDUCTOR, CHIP (1005)
R922	1-218-965-81	s	RES, CHIP 10K
R926	1-218-961-81	s	RES, CHIP 4.7K
R929	1-218-961-81	s	RES, CHIP 4.7K
R930	1-218-961-81	s	RES, CHIP 4.7K
R933	1-218-953-81	s	RES, CHIP 1.0K
R934	1-218-967-81	s	RES, CHIP 15K
R935	1-218-953-81	s	RES, CHIP 1.0K
R936	1-218-940-81	s	RES, CHIP 82
R937	1-218-940-81	s	RES, CHIP 82
R938	1-218-940-81	s	RES, CHIP 82
R939	1-218-940-81	s	RES, CHIP 82
R940	1-218-940-81	s	RES, CHIP 82
R941	1-218-940-81	s	RES, CHIP 82
R942	1-218-990-81	s	CONDUCTOR, CHIP (1005)
R943	1-218-940-81	s	RES, CHIP 82
R944	1-218-940-81	s	RES, CHIP 82
R945	1-218-940-81	s	RES, CHIP 82
R946	1-218-940-81	s	RES, CHIP 82
R947	1-218-940-81	s	RES, CHIP 82
R948	1-218-940-81	s	RES, CHIP 82
R949	1-218-941-81	s	RES, CHIP 100
R950	1-218-940-81	s	RES, CHIP 82
R951	1-218-940-81	s	RES, CHIP 82
R952	1-218-940-81	s	RES, CHIP 82
R953	1-218-940-81	s	RES, CHIP 82
R954	1-218-940-81	s	RES, CHIP 82
R955	1-218-940-81	s	RES, CHIP 82
R956	1-218-940-81	s	RES, CHIP 82
R957	1-218-940-81	s	RES, CHIP 82
R958	1-218-940-81	s	RES, CHIP 82
R959	1-218-940-81	s	RES, CHIP 82
R960	1-218-940-81	s	RES, CHIP 82
R961	1-218-940-81	s	RES, CHIP 82
R962	1-218-957-81	s	RES, CHIP 2.2K
R963	1-218-959-81	s	RES, CHIP 3.3K
R964	1-218-953-81	s	RES, CHIP 1.0K
R965	1-218-957-81	s	RES, CHIP 2.2K
R966	1-218-969-81	s	RES, CHIP 22K
R967	1-218-965-81	s	RES, CHIP 10K
R968	1-218-929-81	s	RES, CHIP 10
R969	1-218-929-81	s	RES, CHIP 10
R970	1-218-969-81	s	RES, CHIP 22K
R971	1-218-970-81	s	RES, CHIP 27K
R972	1-218-990-81	s	CONDUCTOR, CHIP (1005)
R974	1-218-961-81	s	RES, CHIP 4.7K
R975	1-218-969-81	s	RES, CHIP 22K
R976	1-218-969-81	s	RES, CHIP 22K
R977	1-218-953-81	s	RES, CHIP 1.0K
R978	1-220-221-91	s	RES,SQUARE TYPE CHIP 100(4532)
R979	1-208-703-11	s	RES, CHIP 6.8K (1005)
R980	1-218-953-81	s	RES, CHIP 1.0K

(C BOARD)

Ref. No. or Q'ty	Part No.	SP	Description
R981	1-208-721-11	s	RES, CHIP 39K (1005)
R982	1-208-889-81	s	RES, CHIP 1.2K (1005)
R983	1-218-957-81	s	RES, CHIP 2.2K
R984	1-216-864-91	s	CONDUCTOR, CHIP (1608)
R985	1-216-864-91	s	CONDUCTOR, CHIP (1608)
R986	1-218-965-81	s	RES, CHIP 10K
R987	1-218-965-81	s	RES, CHIP 10K
R988	1-218-929-81	s	RES, CHIP 10
R989	1-218-990-81	s	CONDUCTOR, CHIP (1005)
R991	1-218-990-81	s	CONDUCTOR, CHIP (1005)
R996	1-218-929-81	s	RES, CHIP 10
R997	1-218-929-81	s	RES, CHIP 10
R1000	1-218-990-81	s	CONDUCTOR, CHIP (1005)
R1002	1-218-990-81	s	CONDUCTOR, CHIP (1005)
R1007	1-218-929-81	s	RES, CHIP 10
R1008	1-218-929-81	s	RES, CHIP 10
RB200	1-242-963-21	s	RES, NETWORK 33 (1005X4)
RB201	1-242-963-21	s	RES, NETWORK 33 (1005X4)
RB202	1-242-963-21	s	RES, NETWORK 33 (1005X4)
RB203	1-242-963-21	s	RES, NETWORK 33 (1005X4)
RB204	1-242-963-21	s	RES, NETWORK 33 (1005X4)
RB205	1-242-963-21	s	RES, NETWORK 33 (1005X4)
RB206	1-242-963-21	s	RES, NETWORK 33 (1005X4)
RB207	1-242-963-21	s	RES, NETWORK 33 (1005X4)
RB208	1-242-963-21	s	RES, NETWORK 33 (1005X4)
RB209	1-242-963-21	s	RES, NETWORK 33 (1005X4)
RB210	1-242-963-21	s	RES, NETWORK 33 (1005X4)
RB212	1-242-963-21	s	RES, NETWORK 33 (1005X4)
RB213	1-242-963-21	s	RES, NETWORK 33 (1005X4)
RB214	1-242-963-21	s	RES, NETWORK 33 (1005X4)
RB215	1-242-963-21	s	RES, NETWORK 33 (1005X4)
RB300	1-234-370-21	s	RES, NETWORK 22 (1005X4)
RB301	1-234-370-21	s	RES, NETWORK 22 (1005X4)
RB302	1-234-370-21	s	RES, NETWORK 22 (1005X4)
RB303	1-234-370-21	s	RES, NETWORK 22 (1005X4)
RB304	1-234-370-21	s	RES, NETWORK 22 (1005X4)
RB305	1-234-370-21	s	RES, NETWORK 22 (1005X4)
RB306	1-234-371-21	s	RES, NETWORK 47 (1005X4)
RB307	1-234-371-21	s	RES, NETWORK 47 (1005X4)
RB308	1-234-371-21	s	RES, NETWORK 47 (1005X4)
RB309	1-234-371-21	s	RES, NETWORK 47 (1005X4)
RB310	1-234-371-21	s	RES, NETWORK 47 (1005X4)
RB311	1-234-371-21	s	RES, NETWORK 47 (1005X4)
RB312	1-234-370-21	s	RES, NETWORK 22 (1005X4)
RB313	1-234-370-21	s	RES, NETWORK 22 (1005X4)
RB314	1-234-370-21	s	RES, NETWORK 22 (1005X4)
RB315	1-234-370-21	s	RES, NETWORK 22 (1005X4)
RB316	1-234-370-21	s	RES, NETWORK 22 (1005X4)
RB317	1-234-370-21	s	RES, NETWORK 22 (1005X4)
RB400	1-234-370-21	s	RES, NETWORK 22 (1005X4)
RB401	1-234-370-21	s	RES, NETWORK 22 (1005X4)
RB402	1-234-370-21	s	RES, NETWORK 22 (1005X4)
RB403	1-234-370-21	s	RES, NETWORK 22 (1005X4)
RB404	1-234-370-21	s	RES, NETWORK 22 (1005X4)
RB405	1-234-370-21	s	RES, NETWORK 22 (1005X4)
RB406	1-234-370-21	s	RES, NETWORK 22 (1005X4)
RB407	1-234-370-21	s	RES, NETWORK 22 (1005X4)
RB408	1-234-370-21	s	RES, NETWORK 22 (1005X4)

(C BOARD)

Ref. No. or Q'ty	Part No.	SP	Description
RB409	1-234-370-21	s	RES, NETWORK 22 (1005X4)
RB410	1-234-370-21	s	RES, NETWORK 22 (1005X4)
RB411	1-234-370-21	s	RES, NETWORK 22 (1005X4)
RB412	1-234-370-21	s	RES, NETWORK 22 (1005X4)
RB413	1-234-370-21	s	RES, NETWORK 22 (1005X4)
RB414	1-234-370-21	s	RES, NETWORK 22 (1005X4)
RB415	1-234-370-21	s	RES, NETWORK 22 (1005X4)
RB416	1-234-370-21	s	RES, NETWORK 22 (1005X4)
RB417	1-234-370-21	s	RES, NETWORK 22 (1005X4)
RB418	1-242-963-21	s	RES, NETWORK 33 (1005X4)
RB419	1-242-963-21	s	RES, NETWORK 33 (1005X4)
RB420	1-242-963-21	s	RES, NETWORK 33 (1005X4)
RB421	1-242-963-21	s	RES, NETWORK 33 (1005X4)
RB422	1-242-963-21	s	RES, NETWORK 33 (1005X4)
RB423	1-242-963-21	s	RES, NETWORK 33 (1005X4)
RB424	1-242-963-21	s	RES, NETWORK 33 (1005X4)
RB425	1-242-963-21	s	RES, NETWORK 33 (1005X4)
RB426	1-242-963-21	s	RES, NETWORK 33 (1005X4)
RB427	1-242-963-21	s	RES, NETWORK 33 (1005X4)
RB428	1-242-963-21	s	RES, NETWORK 33 (1005X4)
RB429	1-242-963-21	s	RES, NETWORK 33 (1005X4)
RB430	1-242-963-21	s	RES, NETWORK 33 (1005X4)
RB431	1-242-963-21	s	RES, NETWORK 33 (1005X4)
RB432	1-242-963-21	s	RES, NETWORK 33 (1005X4)
RB500	1-234-370-21	s	RES, NETWORK 22 (1005X4)
RB501	1-234-370-21	s	RES, NETWORK 22 (1005X4)
RB502	1-234-370-21	s	RES, NETWORK 22 (1005X4)
RB503	1-234-370-21	s	RES, NETWORK 22 (1005X4)
RB504	1-234-370-21	s	RES, NETWORK 22 (1005X4)
RB505	1-234-370-21	s	RES, NETWORK 22 (1005X4)
RB506	1-234-370-21	s	RES, NETWORK 22 (1005X4)
RB507	1-234-370-21	s	RES, NETWORK 22 (1005X4)
RB508	1-234-370-21	s	RES, NETWORK 22 (1005X4)
RB509	1-234-370-21	s	RES, NETWORK 22 (1005X4)
RB510	1-234-370-21	s	RES, NETWORK 22 (1005X4)
RB511	1-234-370-21	s	RES, NETWORK 22 (1005X4)
RB512	1-234-372-21	s	RES, NETWORK 100 (1005X4)
RB513	1-234-372-21	s	RES, NETWORK 100 (1005X4)
RB514	1-234-372-21	s	RES, NETWORK 100 (1005X4)
RB515	1-234-372-21	s	RES, NETWORK 100 (1005X4)
RB516	1-234-372-21	s	RES, NETWORK 100 (1005X4)
RB517	1-234-372-21	s	RES, NETWORK 100 (1005X4)
RB518	1-234-372-21	s	RES, NETWORK 100 (1005X4)
RB519	1-234-372-21	s	RES, NETWORK 100 (1005X4)
RB520	1-234-371-21	s	RES, NETWORK 47 (1005X4)
RB521	1-234-371-21	s	RES, NETWORK 47 (1005X4)
RB522	1-234-371-21	s	RES, NETWORK 47 (1005X4)
RB523	1-234-371-21	s	RES, NETWORK 47 (1005X4)
RB524	1-234-371-21	s	RES, NETWORK 47 (1005X4)
RB525	1-234-371-21	s	RES, NETWORK 47 (1005X4)
RB526	1-234-371-21	s	RES, NETWORK 47 (1005X4)
RB527	1-234-371-21	s	RES, NETWORK 47 (1005X4)
RB528	1-234-371-21	s	RES, NETWORK 47 (1005X4)
RB529	1-234-371-21	s	RES, NETWORK 47 (1005X4)
RB530	1-234-371-21	s	RES, NETWORK 47 (1005X4)
RB531	1-234-371-21	s	RES, NETWORK 47 (1005X4)
RB532	1-234-371-21	s	RES, NETWORK 47 (1005X4)
RB600	1-234-370-21	s	RES, NETWORK 22 (1005X4)
RB601	1-234-370-21	s	RES, NETWORK 22 (1005X4)

(C BOARD)

Ref. No. or Q'ty	Part No.	SP	Description
RB602	1-234-370-21	s	RES, NETWORK 22 (1005X4)
RB603	1-234-370-21	s	RES, NETWORK 22 (1005X4)
RB604	1-234-370-21	s	RES, NETWORK 22 (1005X4)
RB605	1-234-370-21	s	RES, NETWORK 22 (1005X4)
RB606	1-234-370-21	s	RES, NETWORK 22 (1005X4)
RB607	1-234-370-21	s	RES, NETWORK 22 (1005X4)
RB608	1-234-370-21	s	RES, NETWORK 22 (1005X4)
RB609	1-234-370-21	s	RES, NETWORK 22 (1005X4)
RB610	1-234-370-21	s	RES, NETWORK 22 (1005X4)
RB611	1-234-370-21	s	RES, NETWORK 22 (1005X4)
RB612	1-234-372-21	s	RES, NETWORK 100 (1005X4)
RB613	1-234-372-21	s	RES, NETWORK 100 (1005X4)
RB614	1-234-372-21	s	RES, NETWORK 100 (1005X4)
RB615	1-234-372-21	s	RES, NETWORK 100 (1005X4)
RB616	1-234-372-21	s	RES, NETWORK 100 (1005X4)
RB617	1-234-372-21	s	RES, NETWORK 100 (1005X4)
RB618	1-234-372-21	s	RES, NETWORK 100 (1005X4)
RB619	1-234-372-21	s	RES, NETWORK 100 (1005X4)
RB620	1-234-371-21	s	RES, NETWORK 47 (1005X4)
RB621	1-234-371-21	s	RES, NETWORK 47 (1005X4)
RB622	1-234-371-21	s	RES, NETWORK 47 (1005X4)
RB623	1-234-371-21	s	RES, NETWORK 47 (1005X4)
RB624	1-234-371-21	s	RES, NETWORK 47 (1005X4)
RB625	1-234-371-21	s	RES, NETWORK 47 (1005X4)
RB626	1-234-371-21	s	RES, NETWORK 47 (1005X4)
RB627	1-234-371-21	s	RES, NETWORK 47 (1005X4)
RB628	1-234-371-21	s	RES, NETWORK 47 (1005X4)
RB629	1-234-371-21	s	RES, NETWORK 47 (1005X4)
RB630	1-234-371-21	s	RES, NETWORK 47 (1005X4)
RB631	1-234-371-21	s	RES, NETWORK 47 (1005X4)
RB632	1-234-371-21	s	RES, NETWORK 47 (1005X4)
RB700	1-234-372-21	s	RES, NETWORK 100 (1005X4)
RB701	1-234-372-21	s	RES, NETWORK 100 (1005X4)
RB702	1-234-372-21	s	RES, NETWORK 100 (1005X4)
RB703	1-234-372-21	s	RES, NETWORK 100 (1005X4)
RB704	1-234-372-21	s	RES, NETWORK 100 (1005X4)
RB705	1-234-372-21	s	RES, NETWORK 100 (1005X4)
RB706	1-234-372-21	s	RES, NETWORK 100 (1005X4)
RB707	1-234-372-21	s	RES, NETWORK 100 (1005X4)
RB708	1-234-372-21	s	RES, NETWORK 100 (1005X4)
RB709	1-234-372-21	s	RES, NETWORK 100 (1005X4)
RB710	1-234-372-21	s	RES, NETWORK 100 (1005X4)
RB711	1-234-372-21	s	RES, NETWORK 100 (1005X4)
RB800	1-234-372-21	s	RES, NETWORK 100 (1005X4)
RB801	1-234-372-21	s	RES, NETWORK 100 (1005X4)
RB802	1-234-372-21	s	RES, NETWORK 100 (1005X4)
RB803	1-234-372-21	s	RES, NETWORK 100 (1005X4)
RB804	1-234-372-21	s	RES, NETWORK 100 (1005X4)
RB805	1-234-372-21	s	RES, NETWORK 100 (1005X4)
RB900	1-234-372-21	s	RES, NETWORK 100 (1005X4)
RB901	1-234-372-21	s	RES, NETWORK 100 (1005X4)
RB902	1-234-372-21	s	RES, NETWORK 100 (1005X4)
RB903	1-234-372-21	s	RES, NETWORK 100 (1005X4)
RB904	1-234-372-21	s	RES, NETWORK 100 (1005X4)
RB905	1-234-372-21	s	RES, NETWORK 100 (1005X4)
RB906	1-234-372-21	s	RES, NETWORK 100 (1005X4)
RB907	1-234-372-21	s	RES, NETWORK 100 (1005X4)
RB908	1-234-372-21	s	RES, NETWORK 100 (1005X4)
RB909	1-234-372-21	s	RES, NETWORK 100 (1005X4)

(C BOARD)

Ref. No. or Q'ty	Part No.	SP	Description
RB910	1-234-372-21	s	RES, NETWORK 100 (1005X4)
RB911	1-234-372-21	s	RES, NETWORK 100 (1005X4)
TH100	1-803-382-11	s	THERMISTOR (10K)
TP100	1-535-757-21	s	CHIP, CHECKER
TP101	1-535-757-21	s	CHIP, CHECKER
TP102	1-535-757-21	s	CHIP, CHECKER
TP103	1-535-757-21	s	CHIP, CHECKER
TP104	1-535-757-21	s	CHIP, CHECKER
TP105	1-535-757-21	s	CHIP, CHECKER
TP106	1-535-757-21	s	CHIP, CHECKER
TP107	1-535-757-21	s	CHIP, CHECKER
TP108	1-535-757-21	s	CHIP, CHECKER
TP109	1-535-757-21	s	CHIP, CHECKER
TP200	1-535-757-21	s	CHIP, CHECKER
TP201	1-535-757-21	s	CHIP, CHECKER
TP202	1-535-757-21	s	CHIP, CHECKER
TP300	1-535-757-21	s	CHIP, CHECKER
TP301	1-535-757-21	s	CHIP, CHECKER
TP302	1-535-757-21	s	CHIP, CHECKER
TP303	1-535-757-21	s	CHIP, CHECKER
TP304	1-535-757-21	s	CHIP, CHECKER
TP305	1-535-757-21	s	CHIP, CHECKER
TP306	1-535-757-21	s	CHIP, CHECKER
TP307	1-535-757-21	s	CHIP, CHECKER
TP400	1-535-757-21	s	CHIP, CHECKER
TP700	1-535-757-21	s	CHIP, CHECKER
TP701	1-535-757-21	s	CHIP, CHECKER
TP702	1-535-757-21	s	CHIP, CHECKER
TP703	1-535-757-21	s	CHIP, CHECKER
TP704	1-535-757-21	s	CHIP, CHECKER
TP705	1-535-757-21	s	CHIP, CHECKER
TP800	1-535-757-21	s	CHIP, CHECKER
TP801	1-535-757-21	s	CHIP, CHECKER
TP802	1-535-757-21	s	CHIP, CHECKER
TP803	1-535-757-21	s	CHIP, CHECKER
TP804	1-535-757-21	s	CHIP, CHECKER
TP805	1-535-757-21	s	CHIP, CHECKER
TP900	1-535-757-21	s	CHIP, CHECKER
TP901	1-535-757-21	s	CHIP, CHECKER
TP902	1-535-757-21	s	CHIP, CHECKER
TP903	1-535-757-21	s	CHIP, CHECKER
TP904	1-535-757-21	s	CHIP, CHECKER
TP905	1-535-757-21	s	CHIP, CHECKER
X300	1-781-975-21	s	OSCILLATOR, CRYSTAL

F BOARD

Ref. No. or Q'ty	Part No.	SP	Description
1pc	A-1186-990-A	s	MOUNTED CIRCUIT BOARD, F
1pc	4-374-846-01	o	COVER, CAPACITOR, CAP TYPE
C15	⚠ 1-165-529-31	s	CAP, PETP FILM (ACROSS) 0.22MF
C16	⚠ 1-165-528-31	s	CAP, PETP FILM (ACROSS) 0.1MF
C17	⚠ 1-165-530-31	s	CAP, PETP FILM (ACROSS) 0.47MF
C31	⚠ 1-113-900-51	s	CAP, CERAMIC 470PF B
C32	⚠ 1-113-900-51	s	CAP, CERAMIC 470PF B
CN1	⚠ 1-691-960-11	o	PIN, CONNECTOR (PC BOARD) 3P
CN003	⚠ 1-691-960-21	s	PIN, CONNECTOR (PC BOARD) 3P
ET1	1-780-336-11	s	EARTH TERMINAL
ET2	1-780-336-11	s	EARTH TERMINAL
ET3	1-780-336-11	s	EARTH TERMINAL
ET4	1-780-336-11	s	EARTH TERMINAL
F1	⚠ 1-576-233-51	s	FUSE (H.B.C.) (6.3A/250V)
FH001	1-533-223-22	s	CLIP, FUSE (0A/0V)
FH002	1-533-223-22	s	CLIP, FUSE (0A/0V)
L1	⚠ 1-456-855-11	s	COIL, CHOKE 100UH
L2	⚠ 1-456-855-11	s	COIL, CHOKE 100UH
L3	⚠ 1-456-856-11	s	LINE FILTER COIL
L4	⚠ 1-456-856-11	s	LINE FILTER COIL
R001	⚠ 1-219-759-91	s	RESISTOR (SURGE RESISTANT) 1M
VDR1	⚠ 1-804-995-21	s	VARISTOR
VDR2	⚠ 1-804-995-21	s	VARISTOR

GA BOARD

Ref. No. or Q'ty	Part No.	SP	Description
1pc	A-1186-987-A	s	MOUNTED CIRCUIT BOARD, GA
1pc	4-042-911-21	o	INSULATOR
6pcs	7-322-065-48	o	RUBBER, SILICONE RTV (KE-3490)
3pcs	7-682-650-01	s	SCREW +PS 3X12
C303	1-115-185-91	s	CAP, CERAMIC 33000PF B (2012)
C304	1-115-339-91	s	CAP, CERAMIC 0.1MF B (2012)
C305	1-163-037-91	s	CAP, CERAMIC 22000PF B (2012)
C308	1-115-339-91	s	CAP, CERAMIC 0.1MF B (2012)
C309	1-162-964-91	s	CAP,CHIP CERAMIC 1000PF B 1608
C310	1-125-891-91	s	CAP, CHIP CERAMIC0.47MF B 1608
C312	1-117-227-11	s	CAP, METALIZED PE FILM 1.0MF
C314	1-162-927-91	s	CAP, CERAMIC 100PF CH 1608
C315	1-162-964-91	s	CAP,CHIP CERAMIC 1000PF B 1608
C316	1-162-962-91	s	CAP, CERAMIC 470PF B 1608
C317	1-162-970-91	s	CAP, CERAMIC 10000PF B 1608
C318	1-126-400-21	s	CAP, CHIP ELECT 22MF(6.3X5.7)
C319	1-164-227-91	s	CAP,CERAMIC 22000PF B 1608
C320	1-162-970-91	s	CAP, CERAMIC 10000PF B 1608
C321	1-162-970-91	s	CAP, CERAMIC 10000PF B 1608
C322	1-126-400-21	s	CAP, CHIP ELECT 22MF(6.3X5.7)
C323	1-104-330-91	s	CAP, CERAMIC 470PF R
C324	1-107-826-91	s	CAP, CHIP CERAMIC 100000PF B
C325	1-109-982-91	s	CAP, CHIP CERAMIC 1MF B (2012)
C326	1-163-145-00	s	CAP, CERAMIC 1500PF CH (2012)
C329	1-162-964-91	s	CAP,CHIP CERAMIC 1000PF B 1608
C331	1-104-330-91	s	CAP, CERAMIC 470PF R
C334	1-162-964-91	s	CAP,CHIP CERAMIC 1000PF B 1608
C335	⚠ 1-117-752-11	s	CAP, ELECT 330MF
C337	1-126-400-21	s	CAP, CHIP ELECT 22MF(6.3X5.7)
C338	⚠ 1-112-025-11	s	CAP,ELECT 270MF
C339	1-115-339-91	s	CAP, CERAMIC 0.1MF B (2012)
C340	1-125-827-91	s	CAP, CHIP CERAMIC 1MF B
C345	1-163-021-91	s	CAP, CERAMIC 10000PF B (2012)
C352	1-117-227-11	s	CAP, METALIZED PE FILM 1.0MF
C399	1-161-830-00	s	CAP, CERAMIC 4700PF
CN301	⚠ 1-691-961-11	o	PIN, CONNECTOR (PC BOARD) 3P
CN302	⚠ 1-691-292-11	o	PIN, CONNECTOR (PC BOARD) 5P
CN303	⚠ 1-580-057-21	s	PIN, CONNECTOR (SMD) 4P
CN310	⚠ 1-779-670-11	s	PIN, CONNECTOR (PC BOARD) 5P
D302	8-719-157-40	s	DIODE RD7.5M-T1B
D303	6-501-043-01	s	DIODE UMZ16NT106
D304	8-719-157-40	s	DIODE RD7.5M-T1B
D307	⚠ 8-719-022-99	s	DIODE D6SB60L
D308	8-719-157-40	s	DIODE RD7.5M-T1B
D309	8-719-071-94	s	DIODE HRU0103ATRF
D310	8-719-071-94	s	DIODE HRU0103ATRF
D311	8-719-071-94	s	DIODE HRU0103ATRF
D312	8-719-041-97	s	DIODE MA113-(TX)
D314	8-719-404-50	s	DIODE MA111-TX
D315	8-719-404-50	s	DIODE MA111-TX
D316	8-719-404-50	s	DIODE MA111-TX
D317	8-719-302-03	s	DIODE RM11A
D318	6-500-407-01	s	DIODE SF20L60U-4015
D320	8-719-404-50	s	DIODE MA111-TX
D321	6-501-043-01	s	DIODE UMZ16NT106
FB302	1-410-397-31	s	FERRITE BEAD INDUCTOR 1.1UH
FB303	1-410-397-31	s	FERRITE BEAD INDUCTOR 1.1UH

(GA BOARD)

Ref. No. or Q'ty	Part No.	SP	Description
FB304	1-469-670-21	s	FERRITE, EMI (SMD) (2012)
FB305	1-469-670-21	s	FERRITE, EMI (SMD) (2012)
FB306	1-469-670-21	s	FERRITE, EMI (SMD) (2012)
FB321	1-410-397-31	s	FERRITE BEAD INDUCTOR 1.1UH
FB350	1-469-670-21	s	FERRITE, EMI (SMD) (2012)
FB351	1-469-670-21	s	FERRITE, EMI (SMD) (2012)
IC300	6-704-853-01	s	IC UC2854BN
IC301	8-759-183-53	s	IC TL431CPK-E2
IC302	6-708-254-01	s	IC BA00CC0WFP
IC303	8-759-183-53	s	IC TL431CPK-E2
L301	⚠ 1-457-363-11	s	CHOKE COIL 155UH
L302	⚠ 1-457-277-11	s	CHOKE COIL 260UH
Q301	8-729-040-89	s	TRANSISTOR 2SK1590-T1B
Q302	8-729-230-27	s	TRANSISTOR 2SA1213Y-TE12L
Q304	8-729-807-27	s	TRANSISTOR 2SD1621S-TD-E
Q305	8-729-805-35	s	TRANSISTOR 2SB1121-S-TD
Q306	8-729-038-37	s	TRANSISTOR RT1N141M-TP-1
Q309	8-729-600-22	s	TRANSISTOR 2SA1235TP-1EF
Q310	8-729-600-22	s	TRANSISTOR 2SA1235TP-1EF
Q312	8-729-600-22	s	TRANSISTOR 2SA1235TP-1EF
Q314	⚠ 6-550-366-01	s	TRANSISTOR SPW47N60C3
Q383	8-729-120-28	s	TRANSISTOR 2SC3052EF-T1-LEF
Q384	⚠ 6-550-350-01	s	TRANSISTOR 2SK3265 (LBS2SONY3)
R307	1-216-857-91	s	RES, CHIP 1.0M (1608)
R308	1-216-849-91	s	RES, CHIP 220K (1608)
R309	1-216-849-91	s	RES, CHIP 220K (1608)
R310	1-216-849-91	s	RES, CHIP 220K (1608)
R311	1-216-849-91	s	RES, CHIP 220K (1608)
R312	1-216-847-91	s	RES, CHIP 150K (1608)
R313	1-216-849-91	s	RES, CHIP 220K (1608)
R314	1-216-849-91	s	RES, CHIP 220K (1608)
R315	1-216-849-91	s	RES, CHIP 220K (1608)
R316	1-216-849-91	s	RES, CHIP 220K (1608)
R317	1-216-845-91	s	RES, CHIP 100K (1608)
R318	1-216-836-91	s	RES, CHIP 18K (1608)
R319	1-216-849-91	s	RES, CHIP 220K (1608)
R320	1-216-849-91	s	RES, CHIP 220K (1608)
R321	1-216-849-91	s	RES, CHIP 220K (1608)
R322	1-216-849-91	s	RES, CHIP 220K (1608)
R323	1-216-825-91	s	RES, CHIP 2.2K (1608)
R324	⚠ 1-220-778-81	s	RES, NONFLAMMABLE FUSE 0.1
R325	1-218-847-91	s	RES, CHIP 1.0K (1608)
R326	1-216-830-91	s	RES, CHIP 5.6K (1608)
R327	1-216-857-91	s	RES, CHIP 1.0M (1608)
R328	1-216-837-91	s	RES, CHIP 22K (1608)
R329	1-216-841-91	s	RES, CHIP 47K (1608)
R330	1-216-833-91	s	RES, CHIP 10K (1608)
R331	1-218-871-91	s	RES, CHIP 10K (1608)
R332	1-216-789-91	s	RES, CHIP 2.2 (1608)
R333	1-249-393-91	s	RES, CARBON (SMALL) 10
R334	1-216-833-91	s	RES, CHIP 10K (1608)
R335	1-216-833-91	s	RES, CHIP 10K (1608)
R336	1-216-833-91	s	RES, CHIP 10K (1608)
R337	1-249-393-91	s	RES, CARBON (SMALL) 10
R338	1-249-405-91	s	RES, CARBON (SMALL) 100
R339	1-215-882-71	s	RES, METAL OXIDE FILM 22
R340	1-216-849-91	s	RES, CHIP 220K (1608)

(GA BOARD)

Ref. No. or Q'ty	Part No.	SP	Description
R341	1-218-875-91	s	RES, CHIP 15K (1608)
R342	1-216-837-91	s	RES, CHIP 22K (1608)
R343	1-216-835-91	s	RES, CHIP 15K (1608)
R344	1-216-829-91	s	RES, CHIP 4.7K (1608)
R348	1-218-863-91	s	RES, CHIP 4.7K (1608)
R349	1-218-847-91	s	RES, CHIP 1.0K (1608)
R350	1-208-834-91	s	RES, CHIP 150K (2012)
R351	1-208-834-91	s	RES, CHIP 150K (2012)
R352	1-208-834-91	s	RES, CHIP 150K (2012)
R353	1-208-834-91	s	RES, CHIP 150K (2012)
R354	1-208-834-91	s	RES, CHIP 150K (2012)
R355	1-208-834-91	s	RES, CHIP 150K (2012)
R356	1-218-869-91	s	RES, CHIP 8.2K (1608)
R357	1-218-851-91	s	RES, CHIP 1.5K (1608)
R358	1-218-866-91	s	RES, CHIP 6.2K (1608)
R360	1-215-882-71	s	RES, METAL OXIDE FILM 22
R362	1-218-867-91	s	RES, CHIP 6.8K (1608)
R363	1-216-817-91	s	RES, CHIP 470 (1608)
R364	1-216-833-91	s	RES, CHIP 10K (1608)
R365	1-208-834-91	s	RES, CHIP 150K (2012)
R366	1-208-834-91	s	RES, CHIP 150K (2012)
R367	1-208-838-91	s	RES, CHIP 220K (2012)
R368	1-208-838-91	s	RES, CHIP 220K (2012)
R369	1-208-838-91	s	RES, CHIP 220K (2012)
R370	1-208-838-91	s	RES, CHIP 220K (2012)
R371	1-208-838-91	s	RES, CHIP 220K (2012)
R372	1-216-817-91	s	RES, CHIP 470 (1608)
R373	1-216-833-91	s	RES, CHIP 10K (1608)
R374	1-216-849-91	s	RES, CHIP 220K (1608)
R375	1-218-847-91	s	RES, CHIP 1.0K (1608)
R376	1-216-849-91	s	RES, CHIP 220K (1608)
R377	1-218-863-91	s	RES, CHIP 4.7K (1608)
R378	1-218-863-91	s	RES, CHIP 4.7K (1608)
R379	1-216-845-91	s	RES, CHIP 100K (1608)
R380	1-216-841-91	s	RES, CHIP 47K (1608)
R381	1-216-833-91	s	RES, CHIP 10K (1608)
R382	1-216-841-91	s	RES, CHIP 47K (1608)
R383	1-216-833-91	s	RES, CHIP 10K (1608)
R385	1-219-393-11	s	RES, METAL PLATE 0.05
R386	1-219-393-11	s	RES, METAL PLATE 0.05
R387	1-216-837-91	s	RES, CHIP 22K (1608)
R388	1-216-841-91	s	RES, CHIP 47K (1608)
R399	1-216-857-91	s	RES, CHIP 1.0M (1608)

GB BOARD

Ref. No. or Q'ty	Part No.	SP	Description
1pc	A-1186-988-A	s	MOUNTED CIRCUIT BOARD, GB
1pc	4-374-846-01	o	COVER, CAPACITOR, CAP TYPE
C500	1-162-970-91	s	CAP, CERAMIC 10000PF B 1608
C501	1-163-275-91	s	CAP, CERAMIC 1000PF CH (2012)
C502	1-127-692-11	s	CAP, CERAMIC 10MF B (3216)
C503	1-115-566-91	s	CAP, CERAMIC 4.7MF B
C504	1-162-970-91	s	CAP, CERAMIC 10000PF B 1608
C505	1-107-911-91	s	CAP, ELECT 220MF
C506	1-107-909-91	s	CAP, ELECT 47MF
C507	1-130-495-00	s	CAP, PETP FILM 0.1MF
C508	1-135-834-91	s	CAP, CERAMIC 2200000PF (1608)
C509	⚠ 1-137-754-22	s	CAP, METALIZED PP FILM 6800PF
C510	1-107-911-91	s	CAP, ELECT 220MF
C511	⚠ 1-113-900-51	s	CAP, CERAMIC 470PF B
C512	1-127-820-91	s	CAP, CHIP CERAMIC 4.7MF B 3216
C513	1-107-826-91	s	CAP, CHIP CERAMIC 100000PF B
C514	1-115-852-91	s	CAP, ELECT 2200MF
C515	1-107-826-91	s	CAP, CHIP CERAMIC 100000PF B
C516	1-107-826-91	s	CAP, CHIP CERAMIC 100000PF B
C517	1-115-792-51	s	CAP, ELECT 2200MF
C518	1-115-792-51	s	CAP, ELECT 2200MF
C519	1-107-826-91	s	CAP, CHIP CERAMIC 100000PF B
C520	1-104-330-91	s	CAP, CERAMIC 470PF R
C521	1-107-911-91	s	CAP, ELECT 220MF
C524	1-125-891-91	s	CAP, CHIP CERAMIC0.47MF B 1608
C529	1-126-205-21	s	CAP, ELECT 47MF (5.3X5.5)
C600	1-107-826-91	s	CAP, CHIP CERAMIC 100000PF B
C601	1-107-826-91	s	CAP, CHIP CERAMIC 100000PF B
C602	1-162-927-91	s	CAP, CERAMIC 100PF CH 1608
C603	1-162-927-91	s	CAP, CERAMIC 100PF CH 1608
C604	1-164-230-91	s	CAP,CERAMIC 220PF CH 1608
C605	1-162-964-91	s	CAP,CHIP CERAMIC 1000PF B 1608
C606	1-162-964-91	s	CAP,CHIP CERAMIC 1000PF B 1608
C607	1-164-230-91	s	CAP,CERAMIC 220PF CH 1608
C608	1-162-964-91	s	CAP,CHIP CERAMIC 1000PF B 1608
C609	1-162-964-91	s	CAP,CHIP CERAMIC 1000PF B 1608
C610	1-164-156-91	s	CAP, CHIP CERAMIC 0.1MF F 1608
C611	1-164-156-91	s	CAP, CHIP CERAMIC 0.1MF F 1608
C612	1-125-837-91	s	CAP, CHIP CERAMIC 1MF B (1608)
C613	1-164-506-91	s	CAP,CHIP CERAMIC 4.7MF F 3216
C614	1-100-597-91	s	CAP, CHIP CERAMIC 0.1MF B 1608
C615	1-125-827-91	s	CAP, CHIP CERAMIC 1MF B
C616	1-100-421-21	s	CAP, ELECT 220MF (6.3X5.9)
C617	1-100-421-21	s	CAP, ELECT 220MF (6.3X5.9)
C618	1-100-421-21	s	CAP, ELECT 220MF (6.3X5.9)
C619	1-100-421-21	s	CAP, ELECT 220MF (6.3X5.9)
C630	1-107-826-91	s	CAP, CHIP CERAMIC 100000PF B
C631	1-107-826-91	s	CAP, CHIP CERAMIC 100000PF B
C632	1-162-927-91	s	CAP, CERAMIC 100PF CH 1608
C633	1-162-927-91	s	CAP, CERAMIC 100PF CH 1608
C634	1-164-230-91	s	CAP,CERAMIC 220PF CH 1608
C635	1-162-964-91	s	CAP,CHIP CERAMIC 1000PF B 1608
C636	1-162-964-91	s	CAP,CHIP CERAMIC 1000PF B 1608
C637	1-164-230-91	s	CAP,CERAMIC 220PF CH 1608
C638	1-162-964-91	s	CAP,CHIP CERAMIC 1000PF B 1608
C639	1-162-964-91	s	CAP,CHIP CERAMIC 1000PF B 1608
C640	1-164-156-91	s	CAP, CHIP CERAMIC 0.1MF F 1608
C641	1-164-156-91	s	CAP, CHIP CERAMIC 0.1MF F 1608

(GB BOARD)

Ref. No. or Q'ty	Part No.	SP	Description
C642	1-125-837-91	s	CAP, CHIP CERAMIC 1MF B (1608)
C643	1-127-820-91	s	CAP, CHIP CERAMIC 4.7MF B 3216
C644	1-100-597-91	s	CAP, CHIP CERAMIC 0.1MF B 1608
C645	1-125-827-91	s	CAP, CHIP CERAMIC 1MF B
C646	1-112-467-21	s	CAP, ELECT 560MF (8X6.9)
C647	1-100-421-21	s	CAP, ELECT 220MF (6.3X5.9)
C648	1-100-421-21	s	CAP, ELECT 220MF (6.3X5.9)
C650	1-117-681-21	s	CAP, ELECT 100MF (6.6X5.5)
C700	1-107-820-81	s	CAP, CHIP CERAMIC 100000PF F
C701	1-100-916-11	s	CAP, CERAMIC 0.1MF X7R 1005
C702	1-100-916-11	s	CAP, CERAMIC 0.1MF X7R 1005
C703	1-100-916-11	s	CAP, CERAMIC 0.1MF X7R 1005
C704	1-100-916-11	s	CAP, CERAMIC 0.1MF X7R 1005
C705	1-115-339-91	s	CAP, CERAMIC 0.1MF B (2012)
C706	1-115-339-91	s	CAP, CERAMIC 0.1MF B (2012)
C707	1-115-339-91	s	CAP, CERAMIC 0.1MF B (2012)
C708	1-115-339-91	s	CAP, CERAMIC 0.1MF B (2012)
C709	1-128-992-21	s	CAP, ELECT 47MF (6.6X5.5)
C710	1-128-992-21	s	CAP, ELECT 47MF (6.6X5.5)
C711	1-128-992-21	s	CAP, ELECT 47MF (6.6X5.5)
C712	1-128-992-21	s	CAP, ELECT 47MF (6.6X5.5)
C713	1-131-992-91	s	CAP, CERAMIC 100000PF F 1608
C714	1-131-992-91	s	CAP, CERAMIC 100000PF F 1608
C715	1-131-992-91	s	CAP, CERAMIC 100000PF F 1608
C716	1-131-992-91	s	CAP, CERAMIC 100000PF F 1608
C717	1-164-004-91	s	CAP, CERAMIC 100000PF B (2012)
C718	1-164-004-91	s	CAP, CERAMIC 100000PF B (2012)
C719	1-112-067-11	s	CAP, CERAMIC 0.22MF X7R 1608
C720	1-112-067-11	s	CAP, CERAMIC 0.22MF X7R 1608
C721	1-112-067-11	s	CAP, CERAMIC 0.22MF X7R 1608
C722	1-112-067-11	s	CAP, CERAMIC 0.22MF X7R 1608
C800	1-107-826-91	s	CAP, CHIP CERAMIC 100000PF B
C801	1-100-916-11	s	CAP, CERAMIC 0.1MF X7R 1005
C802	1-164-004-91	s	CAP, CERAMIC 100000PF B (2012)
C804	1-104-607-21	s	CAP, CHIP ELECT 47MF
C805	1-107-826-91	s	CAP, CHIP CERAMIC 100000PF B
C807	1-164-947-81	s	CAP,CHIP CERAMIC 10000PF F1005
C808	1-162-970-91	s	CAP, CERAMIC 10000PF B 1608
C810	1-164-947-81	s	CAP,CHIP CERAMIC 10000PF F1005
C811	1-107-826-91	s	CAP, CHIP CERAMIC 100000PF B
C812	1-107-826-91	s	CAP, CHIP CERAMIC 100000PF B
C813	1-162-970-91	s	CAP, CERAMIC 10000PF B 1608
C814	1-164-947-81	s	CAP,CHIP CERAMIC 10000PF F1005
C815	1-162-970-91	s	CAP, CERAMIC 10000PF B 1608
C900	1-107-820-81	s	CAP, CHIP CERAMIC 100000PF F
C901	1-126-205-21	s	CAP, ELECT 47MF (5.3X5.5)
C902	1-107-820-81	s	CAP, CHIP CERAMIC 100000PF F
C903	1-127-692-11	s	CAP, CERAMIC 10MF B (3216)
C905	1-107-820-81	s	CAP, CHIP CERAMIC 100000PF F
C906	1-126-204-21	s	CAP, ELECT 47MF (6.6X5.5)
C907	1-107-820-81	s	CAP, CHIP CERAMIC 100000PF F
C908	1-126-204-21	s	CAP, ELECT 47MF (6.6X5.5)
C909	1-126-205-21	s	CAP, ELECT 47MF (5.3X5.5)
C910	1-126-205-21	s	CAP, ELECT 47MF (5.3X5.5)
C911	1-126-205-21	s	CAP, ELECT 47MF (5.3X5.5)
C912	1-126-205-21	s	CAP, ELECT 47MF (5.3X5.5)
C913	1-107-820-81	s	CAP, CHIP CERAMIC 100000PF F
C914	1-107-820-81	s	CAP, CHIP CERAMIC 100000PF F
C915	1-107-820-81	s	CAP, CHIP CERAMIC 100000PF F

(GB BOARD)

Ref. No. or Q'ty	Part No.	SP	Description
C916	1-107-820-81	s	CAP, CHIP CERAMIC 100000PF F
C917	1-107-820-81	s	CAP, CHIP CERAMIC 100000PF F
C918	1-107-820-81	s	CAP, CHIP CERAMIC 100000PF F
C919	1-107-820-81	s	CAP, CHIP CERAMIC 100000PF F
C920	1-164-156-91	s	CAP, CHIP CERAMIC 0.1MF F 1608
C921	1-107-820-81	s	CAP, CHIP CERAMIC 100000PF F
C922	1-164-156-91	s	CAP, CHIP CERAMIC 0.1MF F 1608
C923	1-126-204-21	s	CAP, ELECT 47MF (6.6X5.5)
C924	1-126-204-21	s	CAP, ELECT 47MF (6.6X5.5)
CN510	1-779-670-11	s	PIN, CONNECTOR (PC BOARD) 5P
CN600	1-764-829-61	s	CONNECTOR, FPC 24P
CN601	1-764-829-61	s	CONNECTOR, FPC 24P
CN700	1-779-730-61	s	CONNECTOR, FFC/FPC (ZIF) 24P
CN701	1-760-388-21	o	CONNECTOR PIN (SMD) 9P
CN702	1-580-056-21	s	PIN, CONNECTOR (SMD) 3P
CN800	1-793-141-21	o	PIN, CONNECTOR (PC BOARD) 15P
D500	8-719-107-17	s	DIODE RD18M-T1B1
D501	8-719-055-30	s	DIODE D1FS4A-TA
D502	8-719-404-50	s	DIODE MA111-TX
D503	8-719-979-64	s	DIODE UF4005/23
D505	8-719-073-52	s	DIODE D2FS6-TA
D506	8-719-404-50	s	DIODE MA111-TX
D507	⚠ 8-719-510-09	s	DIODE D10SC6M
D508	⚠ 8-719-510-12	s	DIODE D10SC4M
D509	8-719-157-40	s	DIODE RD7.5M-T1B
D510	8-719-157-40	s	DIODE RD7.5M-T1B
D511	⚠ 8-719-510-09	s	DIODE D10SC6M
D512	8-719-157-40	s	DIODE RD7.5M-T1B
D513	8-719-404-50	s	DIODE MA111-TX
D514	8-719-404-50	s	DIODE MA111-TX
D515	8-719-404-50	s	DIODE MA111-TX
D516	8-719-157-40	s	DIODE RD7.5M-T1B
D517	8-719-157-40	s	DIODE RD7.5M-T1B
D518	8-719-404-50	s	DIODE MA111-TX
D519	8-719-404-50	s	DIODE MA111-TX
D520	8-719-404-50	s	DIODE MA111-TX
D521	8-719-404-50	s	DIODE MA111-TX
D523	8-719-404-50	s	DIODE MA111-TX
D525	8-719-404-50	s	DIODE MA111-TX
D526	8-719-404-50	s	DIODE MA111-TX
D533	8-719-080-69	s	DIODE M1FS4-4063
D534	6-500-137-01	s	DIODE BAT54HT1
D535	8-719-107-17	s	DIODE RD18M-T1B1
D536	8-719-107-17	s	DIODE RD18M-T1B1
D602	8-719-056-48	s	DIODE 1SS388(TPL3)
D603	8-719-056-48	s	DIODE 1SS388(TPL3)
D632	8-719-056-48	s	DIODE 1SS388(TPL3)
D633	8-719-056-48	s	DIODE 1SS388(TPL3)
D700	8-719-404-50	s	DIODE MA111-TX
D701	8-719-404-50	s	DIODE MA111-TX
D702	8-719-404-50	s	DIODE MA111-TX
D703	8-719-404-50	s	DIODE MA111-TX
D800	8-719-404-50	s	DIODE MA111-TX
D801	8-719-059-53	s	DIODE MA3J14700LSO
D802	8-719-059-53	s	DIODE MA3J14700LSO
D803	8-719-059-53	s	DIODE MA3J14700LSO
D900	8-719-404-50	s	DIODE MA111-TX
D901	8-719-404-50	s	DIODE MA111-TX

(GB BOARD)

Ref. No. or Q'ty	Part No.	SP	Description
D902	8-719-404-50	s	DIODE MA111-TX
ET500	1-780-336-11	s	EARTH TERMINAL
ET501	1-780-336-11	s	EARTH TERMINAL
ET502	1-780-336-11	s	EARTH TERMINAL
FB502	1-410-397-31	s	FERRITE BEAD INDUCTOR 1.1UH
FB550	1-469-670-21	s	FERRITE, EMI (SMD) (2012)
FB551	1-469-670-21	s	FERRITE, EMI (SMD) (2012)
FB600	1-469-670-21	s	FERRITE, EMI (SMD) (2012)
FB630	1-469-670-21	s	FERRITE, EMI (SMD) (2012)
FB650	1-469-670-21	s	FERRITE, EMI (SMD) (2012)
FB651	1-469-670-21	s	FERRITE, EMI (SMD) (2012)
FB652	1-469-670-21	s	FERRITE, EMI (SMD) (2012)
FB653	1-469-670-21	s	FERRITE, EMI (SMD) (2012)
FB654	1-469-670-21	s	FERRITE, EMI (SMD) (2012)
FB700	1-414-921-21	s	INDUCTOR, FERRITE BEAD
FB701	1-414-921-21	s	INDUCTOR, FERRITE BEAD
FB702	1-414-921-21	s	INDUCTOR, FERRITE BEAD
FB703	1-414-921-21	s	INDUCTOR, FERRITE BEAD
FB704	1-414-921-21	s	INDUCTOR, FERRITE BEAD
FB705	1-414-921-21	s	INDUCTOR, FERRITE BEAD
FB706	1-414-921-21	s	INDUCTOR, FERRITE BEAD
FB707	1-414-921-21	s	INDUCTOR, FERRITE BEAD
FB708	1-414-921-21	s	INDUCTOR, FERRITE BEAD
FB709	1-414-921-21	s	INDUCTOR, FERRITE BEAD
FB710	1-414-921-21	s	INDUCTOR, FERRITE BEAD
FB711	1-414-921-21	s	INDUCTOR, FERRITE BEAD
FB712	1-414-921-21	s	INDUCTOR, FERRITE BEAD
FB713	1-414-921-21	s	INDUCTOR, FERRITE BEAD
FB714	1-414-921-21	s	INDUCTOR, FERRITE BEAD
FB715	1-414-921-21	s	INDUCTOR, FERRITE BEAD
FB716	1-414-921-21	s	INDUCTOR, FERRITE BEAD
FB717	1-414-921-21	s	INDUCTOR, FERRITE BEAD
FB718	1-414-921-21	s	INDUCTOR, FERRITE BEAD
FB719	1-414-921-21	s	INDUCTOR, FERRITE BEAD
FB720	1-414-921-21	s	INDUCTOR, FERRITE BEAD
FB721	1-469-670-21	s	FERRITE, EMI (SMD) (2012)
FB722	1-469-670-21	s	FERRITE, EMI (SMD) (2012)
FB723	1-469-670-21	s	FERRITE, EMI (SMD) (2012)
FB724	1-469-670-21	s	FERRITE, EMI (SMD) (2012)
FB800	1-414-921-21	s	INDUCTOR, FERRITE BEAD
FB801	1-414-921-21	s	INDUCTOR, FERRITE BEAD
FB802	1-414-921-21	s	INDUCTOR, FERRITE BEAD
FB803	1-414-921-21	s	INDUCTOR, FERRITE BEAD
FB804	1-414-921-21	s	INDUCTOR, FERRITE BEAD
FB805	1-414-921-21	s	INDUCTOR, FERRITE BEAD
FB806	1-414-921-21	s	INDUCTOR, FERRITE BEAD
FB807	1-414-921-21	s	INDUCTOR, FERRITE BEAD
FB900	1-469-670-21	s	FERRITE, EMI (SMD) (2012)
FB901	1-469-670-21	s	FERRITE, EMI (SMD) (2012)
FB902	1-469-670-21	s	FERRITE, EMI (SMD) (2012)
FB903	1-400-150-21	s	FERRITE, EMI (SMD) (4516)
FB904	1-400-150-21	s	FERRITE, EMI (SMD) (4516)
FB905	1-400-150-21	s	FERRITE, EMI (SMD) (4516)
FB906	1-400-150-21	s	FERRITE, EMI (SMD) (4516)
FB907	1-400-150-21	s	FERRITE, EMI (SMD) (4516)
FB908	1-400-150-21	s	FERRITE, EMI (SMD) (4516)
FL650	1-234-494-21	s	FILTER, EMI REMOVAL (SMD)

(GB BOARD)

Ref. No. or Q'ty	Part No.	SP	Description
FL651	1-234-494-21	s	FILTER, EMI REMOVAL (SMD)
FL652	1-234-494-21	s	FILTER, EMI REMOVAL (SMD)
FL653	1-234-494-21	s	FILTER, EMI REMOVAL (SMD)
IC500	6-706-852-01	s	IC CXD9841M
IC501	8-759-066-56	s	IC TA75W393FU-TE12R
IC502	8-759-388-23	s	IC TL431BCDR2
IC503	6-708-254-01	s	IC BA00CC0WFP
IC600	6-707-356-01	s	IC LTC3728LCUH#TR-R5
IC630	6-707-356-01	s	IC LTC3728LCUH#TR-R5
IC700	6-704-001-01	s	IC BR24L02F-WE2
IC701	6-706-740-01	s	IC BA00BC0WFP-E2
IC702	6-708-254-01	s	IC BA00CC0WFP
IC703	6-708-254-01	s	IC BA00CC0WFP
IC704	6-706-740-01	s	IC BA00BC0WFP-E2
IC705	6-702-593-01	s	IC BA10358FV-E2
IC706	6-702-593-01	s	IC BA10358FV-E2
IC800	6-706-740-01	s	IC BA00BC0WFP-E2
IC801	8-759-337-40	s	IC NJM2904V(TE2)
IC802	8-759-337-40	s	IC NJM2904V(TE2)
IC803	8-759-646-99	s	IC NJM4556AV(TE2)
IC900	6-806-110-01	s	IC LC4032V-75TN48CA1353-MTC2
IC901	8-759-276-89	s	IC BA6285FP-E2
IC902	8-759-276-89	s	IC BA6285FP-E2
IC903	8-759-276-89	s	IC BA6285FP-E2
IC904	6-706-740-01	s	IC BA00BC0WFP-E2
IC905	6-706-740-01	s	IC BA00BC0WFP-E2
L600	1-424-700-21	s	COIL, CHOKE (SMD) 100UH
L601	1-424-918-21	s	COIL, CHOKE (SMD) 10UH
L630	1-424-918-21	s	COIL, CHOKE (SMD) 10UH
L631	1-416-949-21	s	COIL, CHOKE 15UH
L650	1-409-529-41	s	COIL, CHOKE 10UH
PH500	⚠ 8-749-016-82	s	PHOTO COUPLER PC123GY2J00F
PH501	⚠ 8-749-016-82	s	PHOTO COUPLER PC123GY2J00F
PH502	⚠ 8-749-016-82	s	PHOTO COUPLER PC123GY2J00F
Q500	⚠ 8-729-052-29	s	TRANSISTOR 2SK2876-01MR-F122
Q501	⚠ 8-729-052-29	s	TRANSISTOR 2SK2876-01MR-F122
Q502	8-729-600-22	s	TRANSISTOR 2SA1235TP-1EF
Q503	8-729-120-28	s	TRANSISTOR 2SC3052EF-T1-LEF
Q504	8-729-120-28	s	TRANSISTOR 2SC3052EF-T1-LEF
Q505	8-729-120-28	s	TRANSISTOR 2SC3052EF-T1-LEF
Q506	6-550-596-01	s	TRANSISTOR FDC658P
Q507	6-550-596-01	s	TRANSISTOR FDC658P
Q508	6-550-596-01	s	TRANSISTOR FDC658P
Q509	1-801-806-11	s	TRANSISTOR RT1N441C-TP-1
Q510	1-801-806-11	s	TRANSISTOR RT1N441C-TP-1
Q511	1-801-806-11	s	TRANSISTOR RT1N441C-TP-1
Q512	1-801-806-11	s	TRANSISTOR RT1N441C-TP-1
Q513	1-801-806-11	s	TRANSISTOR RT1N441C-TP-1
Q600	8-729-054-68	s	TRANSISTOR FDS6986S
Q601	8-729-054-68	s	TRANSISTOR FDS6986S
Q630	8-729-054-68	s	TRANSISTOR FDS6986S
Q631	8-729-054-68	s	TRANSISTOR FDS6986S
Q700	8-729-028-91	s	TRANSISTOR DTA144EUA-T106
Q701	8-729-029-14	s	TRANSISTOR DTC144EUA-T106
Q702	8-729-029-14	s	TRANSISTOR DTC144EUA-T106
Q703	8-729-029-14	s	TRANSISTOR DTC144EUA-T106
Q704	8-729-029-14	s	TRANSISTOR DTC144EUA-T106
Q705	8-729-029-14	s	TRANSISTOR DTC144EUA-T106

(GB BOARD)

Ref. No. or Q'ty	Part No.	SP	Description
Q706	8-729-029-14	s	TRANSISTOR DTC144EUA-T106
Q707	8-729-029-14	s	TRANSISTOR DTC144EUA-T106
Q800	8-729-602-21	s	TRANSISTOR 2SC4154TP-1EF
R500	1-216-836-91	s	RES, CHIP 18K (1608)
R501	1-216-821-91	s	RES, CHIP 1.0K (1608)
R502	1-218-873-91	s	RES, CHIP 12K (1608)
R503	1-216-809-91	s	RES, CHIP 100 (1608)
R504	1-249-389-91	s	RES, CARBON (SMALL) 4.7
R505	1-216-836-91	s	RES, CHIP 18K (1608)
R509	1-249-417-91	s	RES, CARBON (SMALL) 1K
R510	1-216-797-91	s	RES, CHIP 10 (1608)
R511	1-216-797-91	s	RES, CHIP 10 (1608)
R512	1-216-811-91	s	RES, CHIP 150 (1608)
R513	1-216-833-91	s	RES, CHIP 10K (1608)
R514	1-216-833-91	s	RES, CHIP 10K (1608)
R515	⚠ 1-220-778-81	s	RES, NONFLAMMABLE FUSE 0.1
R516	1-216-841-91	s	RES, CHIP 47K (1608)
R517	1-216-833-91	s	RES, CHIP 10K (1608)
R518	1-243-803-71	s	RES, OXIDE METAL FILM 0.33
R519	1-216-821-91	s	RES, CHIP 1.0K (1608)
R520	1-216-829-91	s	RES, CHIP 4.7K (1608)
R521	1-216-833-91	s	RES, CHIP 10K (1608)
R522	1-216-845-91	s	RES, CHIP 100K (1608)
R523	1-216-845-91	s	RES, CHIP 100K (1608)
R524	1-216-821-91	s	RES, CHIP 1.0K (1608)
R525	1-216-821-91	s	RES, CHIP 1.0K (1608)
R526	1-216-845-91	s	RES, CHIP 100K (1608)
R527	1-216-833-91	s	RES, CHIP 10K (1608)
R528	1-216-829-91	s	RES, CHIP 4.7K (1608)
R529	1-216-825-91	s	RES, CHIP 2.2K (1608)
R530	1-216-833-91	s	RES, CHIP 10K (1608)
R531	1-216-839-91	s	RES, CHIP 33K (1608)
R532	1-216-833-91	s	RES, CHIP 10K (1608)
R533	1-216-827-91	s	RES, CHIP 3.3K (1608)
R534	1-216-817-91	s	RES, CHIP 470 (1608)
R535	1-216-837-91	s	RES, CHIP 22K (1608)
R536	1-216-833-91	s	RES, CHIP 10K (1608)
R537	1-216-833-91	s	RES, CHIP 10K (1608)
R538	1-216-833-91	s	RES, CHIP 10K (1608)
R539	1-218-859-91	s	RES, CHIP 3.3K (1608)
R540	1-216-841-91	s	RES, CHIP 47K (1608)
R541	1-216-841-91	s	RES, CHIP 47K (1608)
R542	1-218-861-91	s	RES, CHIP 3.9K (1608)
R543	1-218-857-91	s	RES, CHIP 2.7K (1608)
R544	1-218-855-91	s	RES, CHIP 2.2K (1608)
R545	1-218-887-91	s	RES, CHIP 47K (1608)
R546	1-220-338-91	s	RES,SQUARE TYPE CHIP 330K 4532
R547	1-220-338-91	s	RES,SQUARE TYPE CHIP 330K 4532
R548	1-220-338-91	s	RES,SQUARE TYPE CHIP 330K 4532
R549	1-216-809-91	s	RES, CHIP 100 (1608)
R552	1-216-827-91	s	RES, CHIP 3.3K (1608)
R554	1-216-841-91	s	RES, CHIP 47K (1608)
R555	1-216-827-91	s	RES, CHIP 3.3K (1608)
R556	1-216-841-91	s	RES, CHIP 47K (1608)
R557	1-216-838-91	s	RES, CHIP 27K (1608)
R558	1-216-833-91	s	RES, CHIP 10K (1608)
R559	1-216-841-91	s	RES, CHIP 47K (1608)
R560	1-216-833-91	s	RES, CHIP 10K (1608)

(GB BOARD)

Ref. No. or Q'ty	Part No.	SP	Description
R561	1-216-833-91	s	RES, CHIP 10K (1608)
R562	1-216-835-91	s	RES, CHIP 15K (1608)
R563	1-216-829-91	s	RES, CHIP 4.7K (1608)
R564	1-216-841-91	s	RES, CHIP 47K (1608)
R570	1-216-829-91	s	RES, CHIP 4.7K (1608)
R571	1-216-835-91	s	RES, CHIP 15K (1608)
R572	1-216-841-91	s	RES, CHIP 47K (1608)
R573	1-216-835-91	s	RES, CHIP 15K (1608)
R574	1-216-829-91	s	RES, CHIP 4.7K (1608)
R575	1-216-841-91	s	RES, CHIP 47K (1608)
R576	1-216-841-91	s	RES, CHIP 47K (1608)
R577	1-218-879-91	s	RES, CHIP 22K (1608)
R578	1-218-871-91	s	RES, CHIP 10K (1608)
R579	1-218-871-91	s	RES, CHIP 10K (1608)
R580	1-216-841-91	s	RES, CHIP 47K (1608)
R600	1-218-863-91	s	RES, CHIP 4.7K (1608)
R601	1-218-863-91	s	RES, CHIP 4.7K (1608)
R602	1-218-887-91	s	RES, CHIP 47K (1608)
R603	1-218-887-91	s	RES, CHIP 47K (1608)
R604	1-216-833-91	s	RES, CHIP 10K (1608)
R605	1-216-864-91	s	CONDUCTOR, CHIP (1608)
R606	1-216-833-91	s	RES, CHIP 10K (1608)
R607	1-218-875-91	s	RES, CHIP 15K (1608)
R608	1-218-863-91	s	RES, CHIP 4.7K (1608)
R609	1-218-895-91	s	RES, CHIP 100K (1608)
R610	1-218-899-91	s	RES, CHIP 150K (1608)
R611	1-216-833-91	s	RES, CHIP 10K (1608)
R612	1-216-805-91	s	RES, CHIP 47 (1608)
R613	1-216-805-91	s	RES, CHIP 47 (1608)
R614	1-216-797-91	s	RES, CHIP 10 (1608)
R615	1-240-037-91	s	RES, METAL FILM 0.047 (2012)
R616	1-245-414-91	s	RES, METAL FILM 0.01
R630	1-218-863-91	s	RES, CHIP 4.7K (1608)
R631	1-218-863-91	s	RES, CHIP 4.7K (1608)
R632	1-218-887-91	s	RES, CHIP 47K (1608)
R633	1-218-887-91	s	RES, CHIP 47K (1608)
R634	1-216-833-91	s	RES, CHIP 10K (1608)
R635	1-216-864-91	s	CONDUCTOR, CHIP (1608)
R636	1-216-833-91	s	RES, CHIP 10K (1608)
R637	1-218-867-91	s	RES, CHIP 6.8K (1608)
R638	1-218-867-91	s	RES, CHIP 6.8K (1608)
R639	1-218-895-91	s	RES, CHIP 100K (1608)
R640	1-218-899-91	s	RES, CHIP 150K (1608)
R641	1-216-833-91	s	RES, CHIP 10K (1608)
R642	1-216-805-91	s	RES, CHIP 47 (1608)
R643	1-216-805-91	s	RES, CHIP 47 (1608)
R644	1-216-797-91	s	RES, CHIP 10 (1608)
R645	1-245-414-91	s	RES, METAL FILM 0.01
R646	1-220-915-91	s	RES, METAL FILM 0.033 (2012)
R650	1-216-833-91	s	RES, CHIP 10K (1608)
R651	1-216-833-91	s	RES, CHIP 10K (1608)
R652	1-216-817-91	s	RES, CHIP 470 (1608)
R653	1-216-817-91	s	RES, CHIP 470 (1608)
R700	1-218-965-81	s	RES, CHIP 10K
R701	1-218-941-81	s	RES, CHIP 100
R702	1-218-941-81	s	RES, CHIP 100
R703	1-218-965-81	s	RES, CHIP 10K
R704	1-218-965-81	s	RES, CHIP 10K
R705	1-218-965-81	s	RES, CHIP 10K

(GB BOARD)

Ref. No. or Q'ty	Part No.	SP	Description
R706	1-218-965-81	s	RES, CHIP 10K
R707	1-218-965-81	s	RES, CHIP 10K
R708	1-218-965-81	s	RES, CHIP 10K
R709	1-218-965-81	s	RES, CHIP 10K
R710	1-218-965-81	s	RES, CHIP 10K
R711	1-208-927-81	s	RES, CHIP 47K (1005)
R712	1-218-864-11	s	RES, CHIP 5.1K (1005)
R713	1-208-703-11	s	RES, CHIP 6.8K (1005)
R714	1-208-911-81	s	RES, CHIP 10K (1005)
R715	1-208-896-81	s	RES, CHIP 2.4K (1005)
R716	1-208-928-81	s	RES, CHIP 51K (1005)
R717	1-208-699-11	s	RES, CHIP 4.7K (1005)
R718	1-208-908-81	s	RES, CHIP 7.5K (1005)
R719	1-208-911-81	s	RES, CHIP 10K (1005)
R720	1-208-889-81	s	RES, CHIP 1.2K (1005)
R721	1-208-928-81	s	RES, CHIP 51K (1005)
R722	1-208-699-11	s	RES, CHIP 4.7K (1005)
R723	1-208-908-81	s	RES, CHIP 7.5K (1005)
R724	1-208-911-81	s	RES, CHIP 10K (1005)
R725	1-208-889-81	s	RES, CHIP 1.2K (1005)
R726	1-208-927-81	s	RES, CHIP 47K (1005)
R727	1-218-864-11	s	RES, CHIP 5.1K (1005)
R728	1-208-703-11	s	RES, CHIP 6.8K (1005)
R729	1-208-911-81	s	RES, CHIP 10K (1005)
R730	1-208-896-81	s	RES, CHIP 2.4K (1005)
R732	1-208-911-81	s	RES, CHIP 10K (1005)
R736	1-208-711-11	s	RES, CHIP 15K (1005)
R737	1-208-901-81	s	RES, CHIP 3.9K (1005)
R738	1-208-711-11	s	RES, CHIP 15K (1005)
R739	1-208-911-81	s	RES, CHIP 10K (1005)
R740	1-208-901-81	s	RES, CHIP 3.9K (1005)
R741	1-218-965-81	s	RES, CHIP 10K
R742	1-218-965-81	s	RES, CHIP 10K
R743	1-218-941-81	s	RES, CHIP 100
R744	1-218-965-81	s	RES, CHIP 10K
R745	1-218-965-81	s	RES, CHIP 10K
R746	1-218-965-81	s	RES, CHIP 10K
R747	1-216-851-91	s	RES, CHIP 330K (1608)
R748	1-216-851-91	s	RES, CHIP 330K (1608)
R749	1-218-929-81	s	RES, CHIP 10
R750	1-216-851-91	s	RES, CHIP 330K (1608)
R751	1-218-929-81	s	RES, CHIP 10
R752	1-216-851-91	s	RES, CHIP 330K (1608)
R753	1-218-929-81	s	RES, CHIP 10
R754	1-218-929-81	s	RES, CHIP 10
R756	1-216-295-91	s	CONDUCTOR, CHIP (2012)
R800	1-218-965-81	s	RES, CHIP 10K
R801	1-218-961-81	s	RES, CHIP 4.7K
R802	1-208-883-81	s	RES, CHIP 680 (1005)
R803	1-208-691-11	s	RES, CHIP 2.2K (1005)
R804	1-208-703-11	s	RES, CHIP 6.8K (1005)
R805	1-208-691-11	s	RES, CHIP 2.2K (1005)
R807	1-218-990-81	s	CONDUCTOR, CHIP (1005)
R808	1-216-821-91	s	RES, CHIP 1.0K (1608)
R809	1-208-911-81	s	RES, CHIP 10K (1005)
R810	1-218-929-81	s	RES, CHIP 10
R811	1-218-891-91	s	RES, CHIP 68K (1608)
R812	1-208-695-11	s	RES, CHIP 3.3K (1005)
R813	1-208-695-11	s	RES, CHIP 3.3K (1005)

(GB BOARD)

Ref. No. or Q'ty	Part No.	SP	Description
R814	1-208-911-81	s	RES, CHIP 10K (1005)
R815	1-218-990-81	s	CONDUCTOR, CHIP (1005)
R816	1-208-683-11	s	RES, CHIP 1.0K (1005)
R817	1-208-893-81	s	RES, CHIP 1.8K (1005)
R818	1-208-699-11	s	RES, CHIP 4.7K (1005)
R819	1-208-889-81	s	RES, CHIP 1.2K (1005)
R820	1-208-703-11	s	RES, CHIP 6.8K (1005)
R821	1-218-990-81	s	CONDUCTOR, CHIP (1005)
R822	1-218-891-91	s	RES, CHIP 68K (1608)
R823	1-208-911-81	s	RES, CHIP 10K (1005)
R825	1-208-703-11	s	RES, CHIP 6.8K (1005)
R826	1-208-911-81	s	RES, CHIP 10K (1005)
R827	1-218-990-81	s	CONDUCTOR, CHIP (1005)
R828	1-208-695-11	s	RES, CHIP 3.3K (1005)
R829	1-208-683-11	s	RES, CHIP 1.0K (1005)
R830	1-208-695-11	s	RES, CHIP 3.3K (1005)
R831	1-218-887-91	s	RES, CHIP 47K (1608)
R832	1-218-881-91	s	RES, CHIP 27K (1608)
R833	1-208-683-11	s	RES, CHIP 1.0K (1005)
R834	1-218-889-91	s	RES, CHIP 56K (1608)
R835	1-218-887-91	s	RES, CHIP 47K (1608)
R836	1-208-683-11	s	RES, CHIP 1.0K (1005)
R837	1-218-887-91	s	RES, CHIP 47K (1608)
R838	1-218-990-81	s	CONDUCTOR, CHIP (1005)
R839	1-218-911-91	s	RES, CHIP 470K (1608)
R840	1-208-883-81	s	RES, CHIP 680 (1005)
R841	1-208-893-81	s	RES, CHIP 1.8K (1005)
R842	1-208-703-11	s	RES, CHIP 6.8K (1005)
R843	1-208-683-11	s	RES, CHIP 1.0K (1005)
R844	1-218-911-91	s	RES, CHIP 470K (1608)
R845	1-208-703-11	s	RES, CHIP 6.8K (1005)
R846	1-208-883-81	s	RES, CHIP 680 (1005)
R847	1-208-703-11	s	RES, CHIP 6.8K (1005)
R848	1-208-883-81	s	RES, CHIP 680 (1005)
R849	1-218-881-91	s	RES, CHIP 27K (1608)
R900	1-218-941-81	s	RES, CHIP 100
R901	1-218-941-81	s	RES, CHIP 100
R902	1-218-941-81	s	RES, CHIP 100
R903	1-218-941-81	s	RES, CHIP 100
R904	1-218-971-81	s	RES, CHIP 33K
R905	1-218-937-81	s	RES, CHIP 47
R906	1-218-937-81	s	RES, CHIP 47
R907	1-218-937-81	s	RES, CHIP 47
R908	1-218-937-81	s	RES, CHIP 47
R909	1-218-937-81	s	RES, CHIP 47
R910	1-218-937-81	s	RES, CHIP 47
R911	1-218-965-81	s	RES, CHIP 10K
R912	1-218-961-81	s	RES, CHIP 4.7K
R913	1-218-965-81	s	RES, CHIP 10K
R914	1-218-961-81	s	RES, CHIP 4.7K
R915	1-208-883-81	s	RES, CHIP 680 (1005)
R916	1-208-691-11	s	RES, CHIP 2.2K (1005)
R917	1-208-699-11	s	RES, CHIP 4.7K (1005)
R918	1-208-703-11	s	RES, CHIP 6.8K (1005)
R919	1-208-683-11	s	RES, CHIP 1.0K (1005)
R920	1-208-695-11	s	RES, CHIP 3.3K (1005)
R921	1-208-703-11	s	RES, CHIP 6.8K (1005)
R922	1-208-691-11	s	RES, CHIP 2.2K (1005)

(GB BOARD)

Ref. No. or Q'ty		Part No.	SP	Description
T500	⚠	1-437-301-31	s	TRANSFORMER, CONVERTER (PIT)
TP700		1-535-757-21	s	CHIP, CHECKER
TP701		1-535-757-21	s	CHIP, CHECKER
TP702		1-535-757-21	s	CHIP, CHECKER
TP801		1-535-757-21	s	CHIP, CHECKER
TP900		1-535-757-21	s	CHIP, CHECKER

GS BOARD

Ref. No. or Q'ty		Part No.	SP	Description
1pc		A-1188-138-A	s	MOUNTED CIRCUIT BOARD, GS
1pc		7-322-065-48	o	RUBBER, SILICONE RTV (KE-3490)
C200		1-137-639-11	s	CAP, METALIZED PE FILM 0.47MF
C201	⚠	1-107-679-91	s	CAP, ELECT 10MF
C202		1-107-974-91	s	CAP, CERAMIC 47PF SL
C203		1-126-601-11	s	CAP, ELECT 2.2MF (4.3X5.5)
C204		1-162-964-91	s	CAP,CHIP CERAMIC 1000PF B 1608
C205		1-107-910-91	s	CAP, ELECT 100MF
C206		1-107-826-91	s	CAP, CHIP CERAMIC 100000PF B
C207	⚠	1-113-900-51	s	CAP, CERAMIC 470PF B
C208		1-115-708-91	s	CAP, ELECT 470MF
C209		1-107-826-91	s	CAP, CHIP CERAMIC 100000PF B
C210		1-107-826-91	s	CAP, CHIP CERAMIC 100000PF B
C211		1-107-826-91	s	CAP, CHIP CERAMIC 100000PF B
C212		1-165-908-91	s	CAP, CERAMIC 1000000PF B 1608
C213		1-162-964-91	s	CAP,CHIP CERAMIC 1000PF B 1608
C214		1-165-908-91	s	CAP, CERAMIC 1000000PF B 1608
C215		1-104-330-91	s	CAP, CERAMIC 470PF R
C217		1-115-708-91	s	CAP, ELECT 470MF
C220		1-107-826-91	s	CAP, CHIP CERAMIC 100000PF B
C221		1-107-826-91	s	CAP, CHIP CERAMIC 100000PF B
C260		1-161-830-91	s	CAP, CERAMIC 4700PF E
C261		1-161-830-91	s	CAP, CERAMIC 4700PF E
C262		1-107-679-91	s	CAP, ELECT 10MF
C263		1-107-679-91	s	CAP, ELECT 10MF
CN200		1-779-884-21	s	CONNECTOR 4P
CN222	⚠	1-695-320-41	s	PIN, CONNECTOR (1.5MM)(SMD) 2P
CN250	⚠	1-691-960-21	s	PIN, CONNECTOR (PC BOARD) 3P
CN251	⚠	1-691-291-11	o	PIN, CONNECTOR (PC BOARD) 5P
CN252		1-573-290-21	s	PIN, CONNECTOR (1.5MM) (SMD)4P
D200	⚠	8-719-077-76	s	DIODE D2SB60A-F04
D201		8-719-404-50	s	DIODE MA111-TX
D202		8-719-404-50	s	DIODE MA111-TX
D203		8-719-036-94	s	DIODE RD5.6SB-T1
D204		6-501-326-01	s	DIODE BZT03C180
D205		6-500-849-01	s	DIODE ERA22-08KFLB
D206		8-719-066-92	s	DIODE D1FL20U-TA
D207		8-719-083-85	s	DIODE UDZSTE-1722B
D208	⚠	8-719-055-30	s	DIODE D1FS4A-TA
D260		8-719-302-03	s	DIODE RM11A
D261		8-719-302-03	s	DIODE RM11A
D262		8-719-404-50	s	DIODE MA111-TX
ET502		1-780-336-11	s	EARTH TERMINAL
FB200		1-469-670-21	s	FERRITE, EMI (SMD) (2012)
FB201		1-414-921-21	s	INDUCTOR, FERRITE BEAD
FB222		1-469-670-21	s	FERRITE, EMI (SMD) (2012)
FB223		1-469-670-21	s	FERRITE, EMI (SMD) (2012)
IC200	⚠	6-600-279-01	s	IC STR-A6169
IC201		8-759-183-53	s	IC TL431CPK-E2
IC202		6-702-302-01	s	IC TK11133CSCL-G
PH201	⚠	8-749-016-82	s	PHOTO COUPLER PC123GY2J00F
Q201		8-729-120-28	s	TRANSISTOR 2SC3052EF-T1-LEF
Q220		6-550-760-01	s	TRANSISTOR 2SA1363-T111-1E
R203		1-216-295-91	s	CONDUCTOR, CHIP (2012)
R204		1-211-981-91	s	RES, CHIP 33 (1608)

(GS BOARD)

Ref. No. or Q'ty	Part No.	SP	Description
R205	1-249-393-91	s	RES, CARBON (SMALL) 10
R207	1-216-817-91	s	RES, CHIP 470 (1608)
R208	1-216-829-91	s	RES, CHIP 4.7K (1608)
R210	1-216-839-91	s	RES, CHIP 33K (1608)
R211	1-218-857-91	s	RES, CHIP 2.7K (1608)
R212	1-218-863-91	s	RES, CHIP 4.7K (1608)
R213	1-216-821-91	s	RES, CHIP 1.0K (1608)
R214	⚠ 1-243-662-71	s	RES, METAL PLATE 1.0
R215	⚠ 1-243-662-71	s	RES, METAL PLATE 1.0
R220	1-216-833-91	s	RES, CHIP 10K (1608)
R221	1-216-821-91	s	RES, CHIP 1.0K (1608)
R265	⚠ 1-211-748-31	s	RES, CEMENT-COATED (FUSE) 5.6
R266	⚠ 1-211-748-31	s	RES, CEMENT-COATED (FUSE) 5.6
R267	1-202-972-91	s	RES, FUSE 1.0
RY200	⚠ 1-755-356-11	s	RELAY
RY201	⚠ 1-755-389-11	s	RELAY (AC POWER)
T200	⚠ 1-443-299-11	s	CONVERTER TRANSFORMER (SBT)
TH201	1-803-586-31	s	THERMISTOR, NTC

HA BOARD

Ref. No. or Q'ty	Part No.	SP	Description
1pc	A-1186-997-A	s	MOUNTED CIRCUIT BOARD, HA
C060	1-164-156-91	s	CAP, CHIP CERAMIC 0.1MF F 1608
CN60	1-770-621-21	s	PIN, CONNECTOR 4P
D60	6-500-334-01	s	DIODE MC2836-T112-1
D61	6-500-335-01	s	DIODE MC2838-T112-1
R60	1-218-880-91	s	RES, CHIP 24K (1608)
R61	1-218-875-91	s	RES, CHIP 15K (1608)
R62	1-218-867-91	s	RES, CHIP 6.8K (1608)
R63	1-218-861-91	s	RES, CHIP 3.9K (1608)
R64	1-218-857-91	s	RES, CHIP 2.7K (1608)
R65	1-218-855-91	s	RES, CHIP 2.2K (1608)
R66	1-218-851-91	s	RES, CHIP 1.5K (1608)
R67	1-218-853-91	s	RES, CHIP 1.8K (1608)
R68	1-218-895-91	s	RES, CHIP 100K (1608)
R69	1-218-881-91	s	RES, CHIP 27K (1608)
R71	1-218-877-91	s	RES, CHIP 18K (1608)
R72	1-218-861-91	s	RES, CHIP 3.9K (1608)
R73	1-216-864-91	s	CONDUCTOR, CHIP (1608)
R75	1-218-887-91	s	RES, CHIP 47K (1608)
S60	1-786-651-11	s	TACTILE SWITCH
S61	1-771-105-21	s	SWITCH, TACTILE
S62	1-771-105-21	s	SWITCH, TACTILE
S63	1-771-105-21	s	SWITCH, TACTILE
S64	1-771-105-21	s	SWITCH, TACTILE

HB BOARD

Ref. No. or Q'ty	Part No.	SP	Description
1pc	A-1186-998-A	s	MOUNTED CIRCUIT BOARD, HB
C80	1-125-777-81	s	CAP, CHIP CERAMIC 0.1MF B 1005
CN80	1-770-622-21	s	PIN, CONNECTOR 5P
D80	8-719-078-28	s	DIODE SML-010LT-T86
D81	8-719-045-51	s	DIODE SEC2422C
D82	6-500-334-01	s	DIODE MC2836-T112-1
D83	6-500-335-01	s	DIODE MC2838-T112-1
D84	6-500-334-01	s	DIODE MC2836-T112-1
D85	6-500-335-01	s	DIODE MC2838-T112-1
Q80	8-729-029-14	s	TRANSISTOR DTC144EUA-T106
Q81	8-729-029-14	s	TRANSISTOR DTC144EUA-T106
Q82	8-729-029-14	s	TRANSISTOR DTC144EUA-T106
R80	1-218-945-81	s	RES, CHIP 220
R81	1-218-941-81	s	RES, CHIP 100
R82	1-218-941-81	s	RES, CHIP 100

NF BOARD

Ref. No. or Q'ty	Part No.	SP	Description
1pc	A-1186-999-A	s	MOUNTED CIRCUIT BOARD, NF
C40	1-115-156-91	s	CAP, CERAMIC 1000000PF F 1608
CN40	1-785-946-21	s	CONNECTOR 3P
IC40	6-600-419-01	s	IC RS-790N-T
R040	1-216-805-91	s	RES, CHIP 47 (1608)
R041	1-216-809-91	s	RES, CHIP 100 (1608)

NR BOARD

Ref. No. or Q'ty	Part No.	SP	Description
1pc	A-1187-000-A	s	MOUNTED CIRCUIT BOARD, NR
C50	1-115-156-91	s	CAP, CERAMIC 1000000PF F 1608
CN50	1-770-620-21	s	PIN, CONNECTOR 3P
IC50	6-600-419-01	s	IC RS-790N-T
R050	1-216-805-91	s	RES, CHIP 47 (1608)
R051	1-216-809-91	s	RES, CHIP 100 (1608)

Q BOARD

Ref. No. or Q'ty	Part No.	SP	Description
1pc	A-1186-986-A	s	MOUNTED CIRCUIT BOARD, Q
2pcs	1-694-592-21	o	TERMINAL
2pcs	1-780-050-21	s	CONTACT, ON BOARD
C100	1-107-820-81	s	CAP, CHIP CERAMIC 100000PF F
C101	1-126-205-21	s	CAP, ELECT 47MF (5.3X5.5)
C102	1-125-777-81	s	CAP, CHIP CERAMIC 0.1MF B 1005
C103	1-165-908-91	s	CAP, CERAMIC 1000000PF B 1608
C104	1-165-908-91	s	CAP, CERAMIC 1000000PF B 1608
C105	1-112-300-91	s	CAP, CERAMIC 4.7MF B (2012)
C106	1-112-300-91	s	CAP, CERAMIC 4.7MF B (2012)
C107	1-165-908-91	s	CAP, CERAMIC 1000000PF B 1608
C108	1-164-874-81	s	CAP,CHIP CERAMIC 100PF CH 1005
C109	1-125-777-81	s	CAP, CHIP CERAMIC 0.1MF B 1005
C110	1-125-777-81	s	CAP, CHIP CERAMIC 0.1MF B 1005
C111	1-165-908-91	s	CAP, CERAMIC 1000000PF B 1608
C112	1-164-866-81	s	CAP, CHIP CERAMIC 47PF CH 1005
C113	1-164-866-81	s	CAP, CHIP CERAMIC 47PF CH 1005
C114	1-100-566-91	s	CAP, CHIP CERAMIC 0.1MF B 1608
C115	1-164-943-81	s	CAP,CHIP CERAMIC 10000PF B1005
C116	1-164-943-81	s	CAP,CHIP CERAMIC 10000PF B1005
C117	1-164-943-81	s	CAP,CHIP CERAMIC 10000PF B1005
C118	1-164-937-81	s	CAP, CHIPCERAMIC 1000PF B 1005
C120	1-125-777-81	s	CAP, CHIP CERAMIC 0.1MF B 1005
C121	1-165-908-91	s	CAP, CERAMIC 1000000PF B 1608
C122	1-165-908-91	s	CAP, CERAMIC 1000000PF B 1608
C123	1-165-908-91	s	CAP, CERAMIC 1000000PF B 1608
C124	1-126-206-21	s	CAP, ELECT 100MF (6.6X5.5)
C125	1-164-943-81	s	CAP,CHIP CERAMIC 10000PF B1005
C126	1-165-908-91	s	CAP, CERAMIC 1000000PF B 1608
C127	1-164-850-81	s	CAP, CHIP CERAMIC 10PF CH 1005
C128	1-125-777-81	s	CAP, CHIP CERAMIC 0.1MF B 1005
C129	1-164-866-81	s	CAP, CHIP CERAMIC 47PF CH 1005
C130	1-125-777-81	s	CAP, CHIP CERAMIC 0.1MF B 1005
C131	1-164-866-81	s	CAP, CHIP CERAMIC 47PF CH 1005
C132	1-125-777-81	s	CAP, CHIP CERAMIC 0.1MF B 1005
C134	1-125-777-81	s	CAP, CHIP CERAMIC 0.1MF B 1005
C135	1-125-777-81	s	CAP, CHIP CERAMIC 0.1MF B 1005
C136	1-164-943-81	s	CAP,CHIP CERAMIC 10000PF B1005
C137	1-164-866-81	s	CAP, CHIP CERAMIC 47PF CH 1005
C138	1-164-943-81	s	CAP,CHIP CERAMIC 10000PF B1005
C200	1-126-205-21	s	CAP, ELECT 47MF (5.3X5.5)
C201	1-126-205-21	s	CAP, ELECT 47MF (5.3X5.5)
C202	1-164-943-81	s	CAP,CHIP CERAMIC 10000PF B1005
C203	1-164-943-81	s	CAP,CHIP CERAMIC 10000PF B1005
C204	1-164-943-81	s	CAP,CHIP CERAMIC 10000PF B1005
C205	1-164-943-81	s	CAP,CHIP CERAMIC 10000PF B1005
C206	1-164-943-81	s	CAP,CHIP CERAMIC 10000PF B1005
C207	1-125-777-81	s	CAP, CHIP CERAMIC 0.1MF B 1005
C208	1-125-777-81	s	CAP, CHIP CERAMIC 0.1MF B 1005
C209	1-164-943-81	s	CAP,CHIP CERAMIC 10000PF B1005
C210	1-125-777-81	s	CAP, CHIP CERAMIC 0.1MF B 1005
C211	1-125-777-81	s	CAP, CHIP CERAMIC 0.1MF B 1005
C212	1-126-205-21	s	CAP, ELECT 47MF (5.3X5.5)
C213	1-164-943-81	s	CAP,CHIP CERAMIC 10000PF B1005
C214	1-125-777-81	s	CAP, CHIP CERAMIC 0.1MF B 1005
C215	1-125-777-81	s	CAP, CHIP CERAMIC 0.1MF B 1005
C216	1-125-777-81	s	CAP, CHIP CERAMIC 0.1MF B 1005
C217	1-100-909-11	s	CAP, CERAMIC 10MF X6S 2012

(Q BOARD)

Ref. No. or Q'ty	Part No.	SP	Description
C218	1-100-916-11	s	CAP, CERAMIC 0.1MF X7R 1005
C219	1-164-850-81	s	CAP, CHIP CERAMIC 10PF CH 1005
C220	1-100-916-11	s	CAP, CERAMIC 0.1MF X7R 1005
C221	1-100-916-11	s	CAP, CERAMIC 0.1MF X7R 1005
C222	1-100-916-11	s	CAP, CERAMIC 0.1MF X7R 1005
C223	1-100-916-11	s	CAP, CERAMIC 0.1MF X7R 1005
C224	1-164-850-81	s	CAP, CHIP CERAMIC 10PF CH 1005
C225	1-125-777-81	s	CAP, CHIP CERAMIC 0.1MF B 1005
C226	1-125-777-81	s	CAP, CHIP CERAMIC 0.1MF B 1005
C227	1-164-943-81	s	CAP,CHIP CERAMIC 10000PF B1005
C228	1-164-943-81	s	CAP,CHIP CERAMIC 10000PF B1005
C229	1-164-943-81	s	CAP,CHIP CERAMIC 10000PF B1005
C230	1-164-943-81	s	CAP,CHIP CERAMIC 10000PF B1005
C231	1-164-943-81	s	CAP,CHIP CERAMIC 10000PF B1005
C300	1-100-566-91	s	CAP, CHIP CERAMIC 0.1MF B 1608
C301	1-100-566-91	s	CAP, CHIP CERAMIC 0.1MF B 1608
C302	1-100-566-91	s	CAP, CHIP CERAMIC 0.1MF B 1608
C303	1-100-566-91	s	CAP, CHIP CERAMIC 0.1MF B 1608
C304	1-100-566-91	s	CAP, CHIP CERAMIC 0.1MF B 1608
C305	1-100-566-91	s	CAP, CHIP CERAMIC 0.1MF B 1608
C306	1-100-916-11	s	CAP, CERAMIC 0.1MF X7R 1005
C307	1-100-916-11	s	CAP, CERAMIC 0.1MF X7R 1005
C308	1-100-916-11	s	CAP, CERAMIC 0.1MF X7R 1005
C309	1-100-916-11	s	CAP, CERAMIC 0.1MF X7R 1005
C310	1-100-566-91	s	CAP, CHIP CERAMIC 0.1MF B 1608
C311	1-100-916-11	s	CAP, CERAMIC 0.1MF X7R 1005
C312	1-100-566-91	s	CAP, CHIP CERAMIC 0.1MF B 1608
C313	1-100-566-91	s	CAP, CHIP CERAMIC 0.1MF B 1608
C314	1-100-916-11	s	CAP, CERAMIC 0.1MF X7R 1005
C315	1-100-916-11	s	CAP, CERAMIC 0.1MF X7R 1005
C316	1-100-916-11	s	CAP, CERAMIC 0.1MF X7R 1005
C317	1-100-916-11	s	CAP, CERAMIC 0.1MF X7R 1005
C318	1-100-916-11	s	CAP, CERAMIC 0.1MF X7R 1005
C319	1-100-916-11	s	CAP, CERAMIC 0.1MF X7R 1005
C320	1-100-916-11	s	CAP, CERAMIC 0.1MF X7R 1005
C321	1-100-916-11	s	CAP, CERAMIC 0.1MF X7R 1005
C322	1-100-566-91	s	CAP, CHIP CERAMIC 0.1MF B 1608
C323	1-100-566-91	s	CAP, CHIP CERAMIC 0.1MF B 1608
C324	1-100-916-11	s	CAP, CERAMIC 0.1MF X7R 1005
C325	1-100-916-11	s	CAP, CERAMIC 0.1MF X7R 1005
C326	1-100-916-11	s	CAP, CERAMIC 0.1MF X7R 1005
C327	1-100-916-11	s	CAP, CERAMIC 0.1MF X7R 1005
C328	1-100-916-11	s	CAP, CERAMIC 0.1MF X7R 1005
C329	1-100-916-11	s	CAP, CERAMIC 0.1MF X7R 1005
C330	1-100-916-11	s	CAP, CERAMIC 0.1MF X7R 1005
C331	1-100-916-11	s	CAP, CERAMIC 0.1MF X7R 1005
C332	1-100-916-11	s	CAP, CERAMIC 0.1MF X7R 1005
C333	1-100-916-11	s	CAP, CERAMIC 0.1MF X7R 1005
C334	1-100-916-11	s	CAP, CERAMIC 0.1MF X7R 1005
C335	1-100-916-11	s	CAP, CERAMIC 0.1MF X7R 1005
C336	1-100-916-11	s	CAP, CERAMIC 0.1MF X7R 1005
C337	1-100-916-11	s	CAP, CERAMIC 0.1MF X7R 1005
C338	1-100-916-11	s	CAP, CERAMIC 0.1MF X7R 1005
C339	1-100-916-11	s	CAP, CERAMIC 0.1MF X7R 1005
C340	1-100-916-11	s	CAP, CERAMIC 0.1MF X7R 1005
C341	1-100-916-11	s	CAP, CERAMIC 0.1MF X7R 1005
C342	1-100-916-11	s	CAP, CERAMIC 0.1MF X7R 1005
C343	1-100-909-11	s	CAP, CERAMIC 10MF X6S 2012
C344	1-112-691-11	s	CAP, CERAMIC 22MF R 3225

(Q BOARD)

Ref. No. or Q'ty	Part No.	SP	Description
C345	1-112-691-11	s	CAP, CERAMIC 22MF R 3225
C346	1-100-909-11	s	CAP, CERAMIC 10MF X6S 2012
C347	1-100-909-11	s	CAP, CERAMIC 10MF X6S 2012
C350	1-112-691-11	s	CAP, CERAMIC 22MF R 3225
C352	1-164-850-81	s	CAP, CHIP CERAMIC 10PF CH 1005
C353	1-164-850-81	s	CAP, CHIP CERAMIC 10PF CH 1005
C400	1-164-937-81	s	CAP, CHIPCERAMIC 1000PF B 1005
C401	1-100-566-91	s	CAP, CHIP CERAMIC 0.1MF B 1608
C402	1-127-573-91	s	CAP, CHIP CERAMIC 1MF B (2012)
C403	1-125-777-81	s	CAP, CHIP CERAMIC 0.1MF B 1005
C404	1-100-566-91	s	CAP, CHIP CERAMIC 0.1MF B 1608
C405	1-164-874-81	s	CAP,CHIP CERAMIC 100PF CH 1005
C407	1-125-777-81	s	CAP, CHIP CERAMIC 0.1MF B 1005
C408	1-126-204-21	s	CAP, ELECT 47MF (6.6X5.5)
C409	1-126-205-21	s	CAP, ELECT 47MF (5.3X5.5)
C410	1-126-206-21	s	CAP, ELECT 100MF (6.6X5.5)
C411	1-126-206-21	s	CAP, ELECT 100MF (6.6X5.5)
C412	1-125-777-81	s	CAP, CHIP CERAMIC 0.1MF B 1005
C413	1-125-777-81	s	CAP, CHIP CERAMIC 0.1MF B 1005
C414	1-100-159-91	s	CAP, CERAMIC 22MF B (SMD) 3216
C415	1-112-777-11	s	CAP, CERAMIC 0.01MF X7R 1005
C416	1-164-874-81	s	CAP,CHIP CERAMIC 100PF CH 1005
C417	1-112-777-11	s	CAP, CERAMIC 0.01MF X7R 1005
C418	1-112-777-11	s	CAP, CERAMIC 0.01MF X7R 1005
C419	1-164-874-81	s	CAP,CHIP CERAMIC 100PF CH 1005
C420	1-112-777-11	s	CAP, CERAMIC 0.01MF X7R 1005
C421	1-164-874-81	s	CAP,CHIP CERAMIC 100PF CH 1005
C422	1-112-777-11	s	CAP, CERAMIC 0.01MF X7R 1005
C423	1-164-874-81	s	CAP,CHIP CERAMIC 100PF CH 1005
C424	1-112-691-11	s	CAP, CERAMIC 22MF R 3225
C425	1-112-777-11	s	CAP, CERAMIC 0.01MF X7R 1005
C426	1-164-874-81	s	CAP,CHIP CERAMIC 100PF CH 1005
C427	1-164-874-81	s	CAP,CHIP CERAMIC 100PF CH 1005
C428	1-112-777-11	s	CAP, CERAMIC 0.01MF X7R 1005
C429	1-112-777-11	s	CAP, CERAMIC 0.01MF X7R 1005
C430	1-112-777-11	s	CAP, CERAMIC 0.01MF X7R 1005
C431	1-112-777-11	s	CAP, CERAMIC 0.01MF X7R 1005
C432	1-112-777-11	s	CAP, CERAMIC 0.01MF X7R 1005
C433	1-112-777-11	s	CAP, CERAMIC 0.01MF X7R 1005
C434	1-112-777-11	s	CAP, CERAMIC 0.01MF X7R 1005
C435	1-164-874-81	s	CAP,CHIP CERAMIC 100PF CH 1005
C436	1-112-777-11	s	CAP, CERAMIC 0.01MF X7R 1005
C437	1-164-874-81	s	CAP,CHIP CERAMIC 100PF CH 1005
C438	1-112-777-11	s	CAP, CERAMIC 0.01MF X7R 1005
C439	1-112-777-11	s	CAP, CERAMIC 0.01MF X7R 1005
C440	1-112-777-11	s	CAP, CERAMIC 0.01MF X7R 1005
C441	1-112-777-11	s	CAP, CERAMIC 0.01MF X7R 1005
C442	1-112-777-11	s	CAP, CERAMIC 0.01MF X7R 1005
C443	1-112-777-11	s	CAP, CERAMIC 0.01MF X7R 1005
C444	1-112-777-11	s	CAP, CERAMIC 0.01MF X7R 1005
C445	1-164-874-81	s	CAP,CHIP CERAMIC 100PF CH 1005
C446	1-112-777-11	s	CAP, CERAMIC 0.01MF X7R 1005
C447	1-164-874-81	s	CAP,CHIP CERAMIC 100PF CH 1005
C448	1-128-590-21	s	CAP, CHIP ELECT 100MF
C449	1-100-905-11	s	CAP, CERAMIC1000PF X7R 1005
C450	1-164-874-81	s	CAP,CHIP CERAMIC 100PF CH 1005
C451	1-125-777-81	s	CAP, CHIP CERAMIC 0.1MF B 1005
C452	1-100-159-91	s	CAP, CERAMIC 22MF B (SMD) 3216
C453	1-125-777-81	s	CAP, CHIP CERAMIC 0.1MF B 1005

(Q BOARD)

Ref. No. or Q'ty	Part No.	SP	Description
C454	1-126-205-21	s	CAP, ELECT 47MF (5.3X5.5)
C455	1-128-992-21	s	CAP, ELECT 47MF (6.6X5.5)
C456	1-128-992-21	s	CAP, ELECT 47MF (6.6X5.5)
C457	1-128-992-21	s	CAP, ELECT 47MF (6.6X5.5)
C458	1-128-992-21	s	CAP, ELECT 47MF (6.6X5.5)
C459	1-125-777-81	s	CAP, CHIP CERAMIC 0.1MF B 1005
C460	1-164-874-81	s	CAP,CHIP CERAMIC 100PF CH 1005
C500	1-128-590-21	s	CAP, CHIP ELECT 100MF
C501	1-164-874-81	s	CAP,CHIP CERAMIC 100PF CH 1005
C502	1-112-777-11	s	CAP, CERAMIC 0.01MF X7R 1005
C503	1-112-777-11	s	CAP, CERAMIC 0.01MF X7R 1005
C504	1-112-777-11	s	CAP, CERAMIC 0.01MF X7R 1005
C505	1-112-777-11	s	CAP, CERAMIC 0.01MF X7R 1005
C506	1-112-777-11	s	CAP, CERAMIC 0.01MF X7R 1005
C507	1-112-777-11	s	CAP, CERAMIC 0.01MF X7R 1005
C508	1-112-777-11	s	CAP, CERAMIC 0.01MF X7R 1005
C509	1-112-777-11	s	CAP, CERAMIC 0.01MF X7R 1005
C510	1-164-874-81	s	CAP,CHIP CERAMIC 100PF CH 1005
C511	1-112-777-11	s	CAP, CERAMIC 0.01MF X7R 1005
C512	1-112-777-11	s	CAP, CERAMIC 0.01MF X7R 1005
C513	1-112-777-11	s	CAP, CERAMIC 0.01MF X7R 1005
C514	1-164-874-81	s	CAP,CHIP CERAMIC 100PF CH 1005
C515	1-164-874-81	s	CAP,CHIP CERAMIC 100PF CH 1005
C516	1-112-777-11	s	CAP, CERAMIC 0.01MF X7R 1005
C517	1-112-777-11	s	CAP, CERAMIC 0.01MF X7R 1005
C518	1-112-777-11	s	CAP, CERAMIC 0.01MF X7R 1005
C519	1-164-874-81	s	CAP,CHIP CERAMIC 100PF CH 1005
C520	1-112-777-11	s	CAP, CERAMIC 0.01MF X7R 1005
C521	1-112-781-11	s	CAP, CERAMIC 1MF X7R 1608
C522	1-112-777-11	s	CAP, CERAMIC 0.01MF X7R 1005
C523	1-100-916-11	s	CAP, CERAMIC 0.1MF X7R 1005
C524	1-100-916-11	s	CAP, CERAMIC 0.1MF X7R 1005
C525	1-100-909-11	s	CAP, CERAMIC 10MF X6S 2012
C526	1-100-909-11	s	CAP, CERAMIC 10MF X6S 2012
C527	1-112-777-11	s	CAP, CERAMIC 0.01MF X7R 1005
C528	1-164-874-81	s	CAP,CHIP CERAMIC 100PF CH 1005
C529	1-112-777-11	s	CAP, CERAMIC 0.01MF X7R 1005
C530	1-164-874-81	s	CAP,CHIP CERAMIC 100PF CH 1005
C531	1-112-777-11	s	CAP, CERAMIC 0.01MF X7R 1005
C532	1-164-874-81	s	CAP,CHIP CERAMIC 100PF CH 1005
C533	1-112-777-11	s	CAP, CERAMIC 0.01MF X7R 1005
C534	1-164-874-81	s	CAP,CHIP CERAMIC 100PF CH 1005
C535	1-112-777-11	s	CAP, CERAMIC 0.01MF X7R 1005
C536	1-164-874-81	s	CAP,CHIP CERAMIC 100PF CH 1005
C537	1-112-777-11	s	CAP, CERAMIC 0.01MF X7R 1005
C538	1-164-874-81	s	CAP,CHIP CERAMIC 100PF CH 1005
C539	1-112-777-11	s	CAP, CERAMIC 0.01MF X7R 1005
C540	1-164-874-81	s	CAP,CHIP CERAMIC 100PF CH 1005
C541	1-112-777-11	s	CAP, CERAMIC 0.01MF X7R 1005
C542	1-164-874-81	s	CAP,CHIP CERAMIC 100PF CH 1005
C543	1-112-777-11	s	CAP, CERAMIC 0.01MF X7R 1005
C544	1-164-874-81	s	CAP,CHIP CERAMIC 100PF CH 1005
C545	1-112-777-11	s	CAP, CERAMIC 0.01MF X7R 1005
C546	1-164-874-81	s	CAP,CHIP CERAMIC 100PF CH 1005
C547	1-112-777-11	s	CAP, CERAMIC 0.01MF X7R 1005
C548	1-164-874-81	s	CAP,CHIP CERAMIC 100PF CH 1005
C549	1-112-777-11	s	CAP, CERAMIC 0.01MF X7R 1005
C550	1-164-874-81	s	CAP,CHIP CERAMIC 100PF CH 1005
C551	1-100-909-11	s	CAP, CERAMIC 10MF X6S 2012

(Q BOARD)

Ref. No. or Q'ty	Part No.	SP	Description
C552	1-100-909-11	s	CAP, CERAMIC 10MF X6S 2012
C553	1-100-909-11	s	CAP, CERAMIC 10MF X6S 2012
C554	1-100-909-11	s	CAP, CERAMIC 10MF X6S 2012
C555	1-112-777-11	s	CAP, CERAMIC 0.01MF X7R 1005
C556	1-164-874-81	s	CAP,CHIP CERAMIC 100PF CH 1005
C557	1-112-777-11	s	CAP, CERAMIC 0.01MF X7R 1005
C558	1-164-874-81	s	CAP,CHIP CERAMIC 100PF CH 1005
C559	1-112-777-11	s	CAP, CERAMIC 0.01MF X7R 1005
C560	1-164-874-81	s	CAP,CHIP CERAMIC 100PF CH 1005
C561	1-112-777-11	s	CAP, CERAMIC 0.01MF X7R 1005
C562	1-164-874-81	s	CAP,CHIP CERAMIC 100PF CH 1005
C563	1-100-909-11	s	CAP, CERAMIC 10MF X6S 2012
C564	1-100-909-11	s	CAP, CERAMIC 10MF X6S 2012
C571	1-100-916-11	s	CAP, CERAMIC 0.1MF X7R 1005
C600	1-100-916-11	s	CAP, CERAMIC 0.1MF X7R 1005
C603	1-112-781-11	s	CAP, CERAMIC 1MF X7R 1608
C605	1-100-906-11	s	CAP,CERAMIC 0.01MF X7R 1005
C607	1-112-777-11	s	CAP, CERAMIC 0.01MF X7R 1005
C608	1-112-781-11	s	CAP, CERAMIC 1MF X7R 1608
C609	1-112-781-11	s	CAP, CERAMIC 1MF X7R 1608
C610	1-112-777-11	s	CAP, CERAMIC 0.01MF X7R 1005
C611	1-112-777-11	s	CAP, CERAMIC 0.01MF X7R 1005
C612	1-112-777-11	s	CAP, CERAMIC 0.01MF X7R 1005
C613	1-112-777-11	s	CAP, CERAMIC 0.01MF X7R 1005
C614	1-112-777-11	s	CAP, CERAMIC 0.01MF X7R 1005
C615	1-100-916-11	s	CAP, CERAMIC 0.1MF X7R 1005
C616	1-100-909-11	s	CAP, CERAMIC 10MF X6S 2012
C617	1-112-781-11	s	CAP, CERAMIC 1MF X7R 1608
C618	1-100-916-11	s	CAP, CERAMIC 0.1MF X7R 1005
C619	1-100-916-11	s	CAP, CERAMIC 0.1MF X7R 1005
C620	1-164-943-81	s	CAP,CHIP CERAMIC 10000PF B1005
C621	1-100-916-11	s	CAP, CERAMIC 0.1MF X7R 1005
C622	1-164-943-81	s	CAP,CHIP CERAMIC 10000PF B1005
C623	1-164-943-81	s	CAP,CHIP CERAMIC 10000PF B1005
C624	1-164-943-81	s	CAP,CHIP CERAMIC 10000PF B1005
C625	1-164-943-81	s	CAP,CHIP CERAMIC 10000PF B1005
C626	1-164-943-81	s	CAP,CHIP CERAMIC 10000PF B1005
C627	1-164-943-81	s	CAP,CHIP CERAMIC 10000PF B1005
C629	1-164-850-81	s	CAP, CHIP CERAMIC 10PF CH 1005
C630	1-164-850-81	s	CAP, CHIP CERAMIC 10PF CH 1005
C631	1-100-916-11	s	CAP, CERAMIC 0.1MF X7R 1005
C632	1-100-916-11	s	CAP, CERAMIC 0.1MF X7R 1005
C700	1-164-874-81	s	CAP,CHIP CERAMIC 100PF CH 1005
C701	1-164-874-81	s	CAP,CHIP CERAMIC 100PF CH 1005
C702	1-125-777-81	s	CAP, CHIP CERAMIC 0.1MF B 1005
C703	1-126-205-21	s	CAP, ELECT 47MF (5.3X5.5)
C704	1-125-777-81	s	CAP, CHIP CERAMIC 0.1MF B 1005
C706	1-125-777-81	s	CAP, CHIP CERAMIC 0.1MF B 1005
C707	1-125-777-81	s	CAP, CHIP CERAMIC 0.1MF B 1005
C709	1-125-777-81	s	CAP, CHIP CERAMIC 0.1MF B 1005
C710	1-125-777-81	s	CAP, CHIP CERAMIC 0.1MF B 1005
C711	1-125-777-81	s	CAP, CHIP CERAMIC 0.1MF B 1005
C712	1-126-205-21	s	CAP, ELECT 47MF (5.3X5.5)
C713	1-125-777-81	s	CAP, CHIP CERAMIC 0.1MF B 1005
C715	1-125-777-81	s	CAP, CHIP CERAMIC 0.1MF B 1005
C716	1-125-777-81	s	CAP, CHIP CERAMIC 0.1MF B 1005
C718	1-164-850-81	s	CAP, CHIP CERAMIC 10PF CH 1005
C719	1-125-777-81	s	CAP, CHIP CERAMIC 0.1MF B 1005
C720	1-164-850-81	s	CAP, CHIP CERAMIC 10PF CH 1005

(Q BOARD)

Ref. No. or Q'ty	Part No.	SP	Description
C721	1-125-777-81	s	CAP, CHIP CERAMIC 0.1MF B 1005
C722	1-125-777-81	s	CAP, CHIP CERAMIC 0.1MF B 1005
C723	1-164-937-81	s	CAP, CHIPCERAMIC 1000PF B 1005
C724	1-125-777-81	s	CAP, CHIP CERAMIC 0.1MF B 1005
C725	1-125-777-81	s	CAP, CHIP CERAMIC 0.1MF B 1005
C727	1-125-777-81	s	CAP, CHIP CERAMIC 0.1MF B 1005
C729	1-125-777-81	s	CAP, CHIP CERAMIC 0.1MF B 1005
C730	1-125-777-81	s	CAP, CHIP CERAMIC 0.1MF B 1005
C731	1-164-937-81	s	CAP, CHIPCERAMIC 1000PF B 1005
C732	1-164-937-81	s	CAP, CHIPCERAMIC 1000PF B 1005
C733	1-164-937-81	s	CAP, CHIPCERAMIC 1000PF B 1005
C734	1-164-937-81	s	CAP, CHIPCERAMIC 1000PF B 1005
C735	1-164-937-81	s	CAP, CHIPCERAMIC 1000PF B 1005
C736	1-164-937-81	s	CAP, CHIPCERAMIC 1000PF B 1005
C737	1-107-826-91	s	CAP, CHIP CERAMIC 100000PF B
C738	1-107-826-91	s	CAP, CHIP CERAMIC 100000PF B
C739	1-107-826-91	s	CAP, CHIP CERAMIC 100000PF B
C740	1-107-826-91	s	CAP, CHIP CERAMIC 100000PF B
C741	1-107-820-81	s	CAP, CHIP CERAMIC 100000PF F
C743	1-100-916-11	s	CAP, CERAMIC 0.1MF X7R 1005
C744	1-100-916-11	s	CAP, CERAMIC 0.1MF X7R 1005
C789	1-125-777-81	s	CAP, CHIP CERAMIC 0.1MF B 1005
C790	1-125-777-81	s	CAP, CHIP CERAMIC 0.1MF B 1005
CN100	1-784-828-11	s	CONNECTOR, D SUB
CN101	1-819-888-11	s	S TERMINAL
CN200	1-818-086-21	s	HDMI CONNECTOR
CN201	1-818-086-21	s	HDMI CONNECTOR
CN400	1-764-782-51	s	HOUSING, CONNECTOR 24P
CN600	1-785-900-21	s	CONNECTOR 5P
CN601	1-779-336-51	s	CONNECTOR, FFC/FPC 24P
CN603	1-784-254-21	s	CONNECTOR 10P
CN609	1-770-622-21	s	PIN, CONNECTOR 5P
CN700	1-779-806-21	s	CONNECTOR 8P
CN701	1-565-269-11	s	SOCKET, CONNECTOR (D-DUB,L) 9P
CN702	1-779-884-21	s	CONNECTOR 4P
CN703	1-793-152-21	o	CONNECTOR 11P
CN704	1-793-152-21	o	CONNECTOR 11P
D100	6-500-539-01	s	DIODE RSB6.8SFTE61
D101	6-500-539-01	s	DIODE RSB6.8SFTE61
D102	6-500-539-01	s	DIODE RSB6.8SFTE61
D103	6-500-539-01	s	DIODE RSB6.8SFTE61
D104	8-719-037-22	s	DIODE RD12SB-T1
D105	6-500-539-01	s	DIODE RSB6.8SFTE61
D106	8-719-073-11	s	DIODE BZA456A/G.115
D107	8-719-941-87	s	DIODE DAN202UT106
D108	8-719-941-87	s	DIODE DAN202UT106
D109	8-719-059-53	s	DIODE MA3J14700LSO
D110	8-719-059-53	s	DIODE MA3J14700LSO
D111	8-719-056-48	s	DIODE 1SS388(TPL3)
D200	8-719-941-87	s	DIODE DAN202UT106
D201	8-719-941-87	s	DIODE DAN202UT106
D202	8-719-914-44	s	DIODE DAP202K-T-146
D203	8-719-914-44	s	DIODE DAP202K-T-146
D204	8-719-941-87	s	DIODE DAN202UT106
D205	8-719-941-87	s	DIODE DAN202UT106
D300	8-719-059-53	s	DIODE MA3J14700LSO
D301	8-719-059-53	s	DIODE MA3J14700LSO
D302	8-719-059-53	s	DIODE MA3J14700LSO

(Q BOARD)

Ref. No. or Q'ty	Part No.	SP	Description
D303	8-719-059-53	s	DIODE MA3J14700LSO
D304	8-719-059-53	s	DIODE MA3J14700LSO
D305	8-719-059-53	s	DIODE MA3J14700LSO
D306	8-719-059-53	s	DIODE MA3J14700LSO
D307	8-719-059-53	s	DIODE MA3J14700LSO
D400	8-719-404-50	s	DIODE MA111-TX
D601	8-719-073-11	s	DIODE BZA456A/G.115
D702	8-719-024-78	s	DIODE HN1D03FU-TE85R
D703	8-719-037-53	s	DIODE RD27SB-T1
D704	8-719-059-53	s	DIODE MA3J14700LSO
D705	8-719-037-53	s	DIODE RD27SB-T1
D706	8-719-037-53	s	DIODE RD27SB-T1
D707	8-719-059-53	s	DIODE MA3J14700LSO
D708	8-719-037-53	s	DIODE RD27SB-T1
FB100	1-400-693-21	s	INDUCTOR, FERRITE BEAD (1005)
FB101	1-400-693-21	s	INDUCTOR, FERRITE BEAD (1005)
FB102	1-400-693-21	s	INDUCTOR, FERRITE BEAD (1005)
FB103	1-400-693-21	s	INDUCTOR, FERRITE BEAD (1005)
FB200	1-400-693-21	s	INDUCTOR, FERRITE BEAD (1005)
FB201	1-400-693-21	s	INDUCTOR, FERRITE BEAD (1005)
FB202	1-400-693-21	s	INDUCTOR, FERRITE BEAD (1005)
FB203	1-400-693-21	s	INDUCTOR, FERRITE BEAD (1005)
FB204	1-400-693-21	s	INDUCTOR, FERRITE BEAD (1005)
FB205	1-400-693-21	s	INDUCTOR, FERRITE BEAD (1005)
FB206	1-400-693-21	s	INDUCTOR, FERRITE BEAD (1005)
FB300	1-469-083-21	s	INDUCTOR, FERRITE BEAD (1005)
FB400	1-469-670-21	s	FERRITE, EMI (SMD) (2012)
FB401	1-469-670-21	s	FERRITE, EMI (SMD) (2012)
FB402	1-469-670-21	s	FERRITE, EMI (SMD) (2012)
FB403	1-469-670-21	s	FERRITE, EMI (SMD) (2012)
FB500	1-400-693-21	s	INDUCTOR, FERRITE BEAD (1005)
FB501	1-469-670-21	s	FERRITE, EMI (SMD) (2012)
FB502	1-469-670-21	s	FERRITE, EMI (SMD) (2012)
FB504	1-469-670-21	s	FERRITE, EMI (SMD) (2012)
FB600	1-400-693-21	s	INDUCTOR, FERRITE BEAD (1005)
FB601	1-400-693-21	s	INDUCTOR, FERRITE BEAD (1005)
FB602	1-400-693-21	s	INDUCTOR, FERRITE BEAD (1005)
FB603	1-400-693-21	s	INDUCTOR, FERRITE BEAD (1005)
FB604	1-400-693-21	s	INDUCTOR, FERRITE BEAD (1005)
FB605	1-400-693-21	s	INDUCTOR, FERRITE BEAD (1005)
FB606	1-400-693-21	s	INDUCTOR, FERRITE BEAD (1005)
FB607	1-400-693-21	s	INDUCTOR, FERRITE BEAD (1005)
FB608	1-400-693-21	s	INDUCTOR, FERRITE BEAD (1005)
FB609	1-400-693-21	s	INDUCTOR, FERRITE BEAD (1005)
FB610	1-400-693-21	s	INDUCTOR, FERRITE BEAD (1005)
FB611	1-400-693-21	s	INDUCTOR, FERRITE BEAD (1005)
FB612	1-400-693-21	s	INDUCTOR, FERRITE BEAD (1005)
FB613	1-400-693-21	s	INDUCTOR, FERRITE BEAD (1005)
FB614	1-400-693-21	s	INDUCTOR, FERRITE BEAD (1005)
FB615	1-400-693-21	s	INDUCTOR, FERRITE BEAD (1005)
FB616	1-400-693-21	s	INDUCTOR, FERRITE BEAD (1005)
FB617	1-400-693-21	s	INDUCTOR, FERRITE BEAD (1005)
FB618	1-400-693-21	s	INDUCTOR, FERRITE BEAD (1005)
FB619	1-400-693-21	s	INDUCTOR, FERRITE BEAD (1005)
FB620	1-400-693-21	s	INDUCTOR, FERRITE BEAD (1005)
FB621	1-400-693-21	s	INDUCTOR, FERRITE BEAD (1005)
FB622	1-400-693-21	s	INDUCTOR, FERRITE BEAD (1005)
FB623	1-400-693-21	s	INDUCTOR, FERRITE BEAD (1005)
FB624	1-400-693-21	s	INDUCTOR, FERRITE BEAD (1005)

(Q BOARD)

Ref. No. or Q'ty	Part No.	SP	Description
FB631	1-400-693-21	s	INDUCTOR, FERRITE BEAD (1005)
FB632	1-400-693-21	s	INDUCTOR, FERRITE BEAD (1005)
FB633	1-400-693-21	s	INDUCTOR, FERRITE BEAD (1005)
FB634	1-400-693-21	s	INDUCTOR, FERRITE BEAD (1005)
FB635	1-400-693-21	s	INDUCTOR, FERRITE BEAD (1005)
FB637	1-400-693-21	s	INDUCTOR, FERRITE BEAD (1005)
FB700	1-400-693-21	s	INDUCTOR, FERRITE BEAD (1005)
FB701	1-400-693-21	s	INDUCTOR, FERRITE BEAD (1005)
FB702	1-400-693-21	s	INDUCTOR, FERRITE BEAD (1005)
FB703	1-400-693-21	s	INDUCTOR, FERRITE BEAD (1005)
FB704	1-400-693-21	s	INDUCTOR, FERRITE BEAD (1005)
FB705	1-400-693-21	s	INDUCTOR, FERRITE BEAD (1005)
FB706	1-400-693-21	s	INDUCTOR, FERRITE BEAD (1005)
FB707	1-400-693-21	s	INDUCTOR, FERRITE BEAD (1005)
FB709	1-400-693-21	s	INDUCTOR, FERRITE BEAD (1005)
FB710	1-400-693-21	s	INDUCTOR, FERRITE BEAD (1005)
FB712	1-400-693-21	s	INDUCTOR, FERRITE BEAD (1005)
FB713	1-400-693-21	s	INDUCTOR, FERRITE BEAD (1005)
FB714	1-400-693-21	s	INDUCTOR, FERRITE BEAD (1005)
FB715	1-400-693-21	s	INDUCTOR, FERRITE BEAD (1005)
FB716	1-400-693-21	s	INDUCTOR, FERRITE BEAD (1005)
FB717	1-400-693-21	s	INDUCTOR, FERRITE BEAD (1005)
FB718	1-400-693-21	s	INDUCTOR, FERRITE BEAD (1005)
FB719	1-400-693-21	s	INDUCTOR, FERRITE BEAD (1005)
FB721	1-400-693-21	s	INDUCTOR, FERRITE BEAD (1005)
FB722	1-400-693-21	s	INDUCTOR, FERRITE BEAD (1005)
FL400	1-400-874-11	s	FILTER, EMI REMOVAL (SMD)
FL401	1-400-874-11	s	FILTER, EMI REMOVAL (SMD)
FL402	1-234-494-21	s	FILTER, EMI REMOVAL (SMD)
FL403	1-234-494-21	s	FILTER, EMI REMOVAL (SMD)
FL500	1-400-874-11	s	FILTER, EMI REMOVAL (SMD)
IC100	6-704-001-01	s	IC BR24L02F-WE2
IC101	8-759-337-26	s	IC MM1115XFBE
IC102	8-759-669-41	s	IC SN74LVC125APWR-12
IC103	6-709-172-01	s	IC TE8201PF
IC104	6-703-225-01	s	IC S-80928CNMC-G8YT2G
IC200	6-704-001-01	s	IC BR24L02F-WE2
IC201	6-704-001-01	s	IC BR24L02F-WE2
IC202	8-753-261-22	s	IC CXB1442R-T4
IC203	6-708-758-01	s	IC PCA9517DP.118
IC204	6-708-758-01	s	IC PCA9517DP.118
IC205	8-759-596-34	s	IC SN74LV4053APWR
IC206	6-710-097-01	s	IC PW392S-30L
IC400	6-704-842-01	s	IC AIC1117A-33PEJTR
IC401	6-704-843-01	s	IC AIC1117A-PEJTR
IC402	6-702-295-01	s	IC NJM78M12DL1A-TE1
IC403	6-704-954-01	s	IC AIC1117A-50PYJTR
IC404	6-706-136-01	s	IC LTC3412EFE#TR
IC405	6-705-766-01	s	IC S-80924CNMC-G8UT2G
IC500	6-708-482-01	s	IC EDD2516AKTA-5C-E
IC501	6-708-482-01	s	IC EDD2516AKTA-5C-E
IC600	6-703-225-01	s	IC S-80928CNMC-G8YT2G
IC601	6-710-121-01	s	IC M24256-BWMN6TP(A)
IC602	6-806-997-01	s	IC CY25100ZXC-WT
IC603	6-806-846-01	s	IC MX29LV160CTTC-70G-839PW
IC604	6-710-455-01	s	IC LTC4300A-2IMS8#TR
IC700	8-759-681-47	s	IC IRMF-A0T-QTP
IC701	8-759-649-43	s	IC SN74AHC1G00DCKR

(Q BOARD)

Ref. No. or Q'ty	Part No.	SP	Description
IC702	8-759-549-01	s	IC SN74LV125APWR
IC703	6-702-688-01	s	IC M24C64-WMN6T(B)
IC705	6-703-225-01	s	IC S-80928CNMC-G8YT2G
IC707	6-707-950-01	s	IC S-89530ACNC-HCBTFG
IC708	8-759-596-29	s	IC SN74LV4066APWR
IC709	6-706-923-01	s	IC MAX3222IDBR
IC710	6-710-094-01	s	IC HD64F2365VTE34SNV
IC711	6-703-225-01	s	IC S-80928CNMC-G8YT2G
J100	1-695-473-11	s	JACK (EARPHONE)
J101	1-819-887-11	s	JACK, PIN 1P
J102	1-819-886-11	s	JACK, PIN 3P
L100	1-469-525-91	s	INDUCTOR 10UH (NLFV25)
L200	1-457-374-21	s	COMMOM MODE CHOKE COIL
L201	1-457-374-21	s	COMMOM MODE CHOKE COIL
L202	1-457-374-21	s	COMMOM MODE CHOKE COIL
L203	1-457-374-21	s	COMMOM MODE CHOKE COIL
L204	1-457-374-21	s	COMMOM MODE CHOKE COIL
L205	1-457-374-21	s	COMMOM MODE CHOKE COIL
L206	1-457-374-21	s	COMMOM MODE CHOKE COIL
L207	1-457-374-21	s	COMMOM MODE CHOKE COIL
L208	1-414-753-91	s	INDUCTOR 4.7UH
L209	1-469-553-21	s	INDUCTOR, CHIP 4.7UH (LB2016)
L300	1-469-555-21	s	INDUCTOR, CHIP 10UH (LB2016)
L301	1-469-555-21	s	INDUCTOR, CHIP 10UH (LB2016)
L302	1-469-555-21	s	INDUCTOR, CHIP 10UH (LB2016)
L303	1-469-555-21	s	INDUCTOR, CHIP 10UH (LB2016)
L304	1-469-555-21	s	INDUCTOR, CHIP 10UH (LB2016)
L305	1-469-555-21	s	INDUCTOR, CHIP 10UH (LB2016)
L306	1-456-583-21	s	COMMON MODE CHOKE COIL
L307	1-456-583-21	s	COMMON MODE CHOKE COIL
L308	1-456-583-21	s	COMMON MODE CHOKE COIL
L309	1-456-583-21	s	COMMON MODE CHOKE COIL
L310	1-456-583-21	s	COMMON MODE CHOKE COIL
L311	1-456-583-21	s	COMMON MODE CHOKE COIL
L312	1-456-583-21	s	COMMON MODE CHOKE COIL
L313	1-456-583-21	s	COMMON MODE CHOKE COIL
L314	1-456-583-21	s	COMMON MODE CHOKE COIL
L315	1-456-583-21	s	COMMON MODE CHOKE COIL
L316	1-456-583-21	s	COMMON MODE CHOKE COIL
L317	1-456-583-21	s	COMMON MODE CHOKE COIL
L400	1-412-026-22	s	CHIP INDUCTOR 1UH
L401	1-400-177-21	s	INDUCTOR, EMI FERRITE (1608)
L600	1-469-549-21	s	INDUCTOR, CHIP 1.0UH (LB2016)
L601	1-469-549-21	s	INDUCTOR, CHIP 1.0UH (LB2016)
L602	1-469-549-21	s	INDUCTOR, CHIP 1.0UH (LB2016)
Q100	6-551-387-01	s	TRANSISTOR SSM6N16FU
Q101	6-551-387-01	s	TRANSISTOR SSM6N16FU
Q102	8-729-029-14	s	TRANSISTOR DTC144EUA-T106
Q103	8-729-026-53	s	TRANSISTOR 2SA1576A-T106-QR
Q104	8-729-026-53	s	TRANSISTOR 2SA1576A-T106-QR
Q105	8-729-905-38	s	TRANSISTOR 2SC4081T106R
Q106	6-551-387-01	s	TRANSISTOR SSM6N16FU
Q107	6-551-387-01	s	TRANSISTOR SSM6N16FU
Q108	8-729-905-38	s	TRANSISTOR 2SC4081T106R
Q109	8-729-026-53	s	TRANSISTOR 2SA1576A-T106-QR
Q110	8-729-026-53	s	TRANSISTOR 2SA1576A-T106-QR
Q111	6-551-387-01	s	TRANSISTOR SSM6N16FU
Q112	8-729-026-53	s	TRANSISTOR 2SA1576A-T106-QR

(Q BOARD)

Ref. No. or Q'ty	Part No.	SP	Description
Q113	6-551-387-01	s	TRANSISTOR SSM6N16FU
Q200	8-729-029-14	s	TRANSISTOR DTC144EUA-T106
Q201	8-729-029-14	s	TRANSISTOR DTC144EUA-T106
Q202	8-729-029-14	s	TRANSISTOR DTC144EUA-T106
Q203	8-729-029-14	s	TRANSISTOR DTC144EUA-T106
Q204	6-550-765-01	s	TRANSISTOR SSM3K16FS(TE85L)
Q205	6-550-765-01	s	TRANSISTOR SSM3K16FS(TE85L)
Q206	6-551-387-01	s	TRANSISTOR SSM6N16FU
Q207	6-551-387-01	s	TRANSISTOR SSM6N16FU
Q208	6-551-387-01	s	TRANSISTOR SSM6N16FU
Q209	6-551-387-01	s	TRANSISTOR SSM6N16FU
Q210	6-551-387-01	s	TRANSISTOR SSM6N16FU
Q211	6-551-387-01	s	TRANSISTOR SSM6N16FU
Q212	6-551-387-01	s	TRANSISTOR SSM6N16FU
Q213	8-729-029-14	s	TRANSISTOR DTC144EUA-T106
Q214	8-729-029-14	s	TRANSISTOR DTC144EUA-T106
Q215	6-551-387-01	s	TRANSISTOR SSM6N16FU
Q216	6-551-387-01	s	TRANSISTOR SSM6N16FU
Q400	8-729-038-42	s	TRANSISTOR RT1N441M-TP-1
Q401	6-550-596-01	s	TRANSISTOR FDC658P
Q600	8-729-026-53	s	TRANSISTOR 2SA1576A-T106-QR
Q601	8-729-013-28	s	TRANSISTOR HN1B01FU-TE85R
Q605	8-729-013-24	s	TRANSISTOR HN1C01FU-TE85R
Q700	8-729-013-28	s	TRANSISTOR HN1B01FU-TE85R
Q701	6-551-387-01	s	TRANSISTOR SSM6N16FU
Q703	8-729-120-28	s	TRANSISTOR 2SC3052EF-T1-LEF
R100	1-218-973-81	s	RES, CHIP 47K
R101	1-218-990-81	s	CONDUCTOR, CHIP (1005)
R102	1-218-990-81	s	CONDUCTOR, CHIP (1005)
R103	1-216-829-91	s	RES, CHIP 4.7K (1608)
R104	1-218-973-81	s	RES, CHIP 47K
R105	1-218-937-81	s	RES, CHIP 47
R106	1-218-937-81	s	RES, CHIP 47
R107	1-218-961-81	s	RES, CHIP 4.7K
R108	1-211-990-91	s	RES, CHIP 75 (1608)
R109	1-211-990-91	s	RES, CHIP 75 (1608)
R110	1-211-990-91	s	RES, CHIP 75 (1608)
R111	1-211-990-91	s	RES, CHIP 75 (1608)
R112	1-211-990-91	s	RES, CHIP 75 (1608)
R113	1-211-990-91	s	RES, CHIP 75 (1608)
R114	1-218-961-81	s	RES, CHIP 4.7K
R115	1-218-965-81	s	RES, CHIP 10K
R116	1-208-923-81	s	RES, CHIP 33K (1005)
R117	1-218-961-81	s	RES, CHIP 4.7K
R118	1-216-864-91	s	CONDUCTOR, CHIP (1608)
R119	1-216-864-91	s	CONDUCTOR, CHIP (1608)
R120	1-218-961-81	s	RES, CHIP 4.7K
R121	1-218-990-81	s	CONDUCTOR, CHIP (1005)
R122	1-218-990-81	s	CONDUCTOR, CHIP (1005)
R123	1-218-937-81	s	RES, CHIP 47
R124	1-218-937-81	s	RES, CHIP 47
R125	1-218-937-81	s	RES, CHIP 47
R126	1-218-937-81	s	RES, CHIP 47
R127	1-218-937-81	s	RES, CHIP 47
R129	1-218-953-81	s	RES, CHIP 1.0K
R130	1-218-949-81	s	RES, CHIP 470
R131	1-218-965-81	s	RES, CHIP 10K
R132	1-218-949-81	s	RES, CHIP 470

(Q BOARD)

Ref. No. or Q'ty	Part No.	SP	Description
R133	1-218-965-81	s	RES, CHIP 10K
R134	1-218-977-81	s	RES, CHIP 100K
R135	1-218-977-81	s	RES, CHIP 100K
R136	1-218-977-81	s	RES, CHIP 100K
R137	1-218-977-81	s	RES, CHIP 100K
R138	1-218-941-81	s	RES, CHIP 100
R139	1-218-941-81	s	RES, CHIP 100
R140	1-218-953-81	s	RES, CHIP 1.0K
R141	1-218-953-81	s	RES, CHIP 1.0K
R142	1-218-937-81	s	RES, CHIP 47
R143	1-218-937-81	s	RES, CHIP 47
R144	1-218-951-81	s	RES, CHIP 680
R145	1-218-957-81	s	RES, CHIP 2.2K
R146	1-218-953-81	s	RES, CHIP 1.0K
R147	1-218-961-81	s	RES, CHIP 4.7K
R149	1-218-953-81	s	RES, CHIP 1.0K
R150	1-218-961-81	s	RES, CHIP 4.7K
R151	1-218-953-81	s	RES, CHIP 1.0K
R152	1-218-941-81	s	RES, CHIP 100
R153	1-218-961-81	s	RES, CHIP 4.7K
R155	1-218-929-81	s	RES, CHIP 10
R156	1-218-929-81	s	RES, CHIP 10
R157	1-216-864-91	s	CONDUCTOR, CHIP (1608)
R158	1-218-929-81	s	RES, CHIP 10
R159	1-218-929-81	s	RES, CHIP 10
R160	1-218-965-81	s	RES, CHIP 10K
R161	1-218-965-81	s	RES, CHIP 10K
R162	1-218-931-81	s	RES, CHIP 15
R163	1-208-912-81	s	RES, CHIP 11K (1005)
R164	1-218-989-81	s	RES, CHIP 1M
R165	1-218-990-81	s	CONDUCTOR, CHIP (1005)
R167	1-218-941-81	s	RES, CHIP 100
R168	1-218-941-81	s	RES, CHIP 100
R169	1-218-965-81	s	RES, CHIP 10K
R170	1-218-937-81	s	RES, CHIP 47
R171	1-218-965-81	s	RES, CHIP 10K
R172	1-218-941-81	s	RES, CHIP 100
R173	1-218-937-81	s	RES, CHIP 47
R174	1-218-977-81	s	RES, CHIP 100K
R175	1-218-977-81	s	RES, CHIP 100K
R176	1-218-937-81	s	RES, CHIP 47
R177	1-218-937-81	s	RES, CHIP 47
R178	1-218-977-81	s	RES, CHIP 100K
R179	1-218-977-81	s	RES, CHIP 100K
R180	1-218-965-81	s	RES, CHIP 10K
R181	1-218-953-81	s	RES, CHIP 1.0K
R182	1-218-961-81	s	RES, CHIP 4.7K
R183	1-218-961-81	s	RES, CHIP 4.7K
R184	1-218-937-81	s	RES, CHIP 47
R185	1-218-937-81	s	RES, CHIP 47
R186	1-218-937-81	s	RES, CHIP 47
R187	1-211-979-91	s	RES, CHIP 27 (1608)
R188	1-211-985-91	s	RES, CHIP 47 (1608)
R189	1-211-979-91	s	RES, CHIP 27 (1608)
R190	1-211-985-91	s	RES, CHIP 47 (1608)
R191	1-211-979-91	s	RES, CHIP 27 (1608)
R192	1-211-985-91	s	RES, CHIP 47 (1608)
R193	1-218-941-81	s	RES, CHIP 100
R194	1-218-953-81	s	RES, CHIP 1.0K

(Q BOARD)

Ref. No. or Q'ty	Part No.	SP	Description
R195	1-218-937-81	s	RES, CHIP 47
R196	1-218-961-81	s	RES, CHIP 4.7K
R197	1-216-864-91	s	CONDUCTOR, CHIP (1608)
R198	1-216-864-91	s	CONDUCTOR, CHIP (1608)
R199	1-216-864-91	s	CONDUCTOR, CHIP (1608)
R200	1-216-864-91	s	CONDUCTOR, CHIP (1608)
R201	1-218-953-81	s	RES, CHIP 1.0K
R202	1-216-864-91	s	CONDUCTOR, CHIP (1608)
R203	1-218-953-81	s	RES, CHIP 1.0K
R204	1-218-965-81	s	RES, CHIP 10K
R205	1-218-965-81	s	RES, CHIP 10K
R206	1-218-965-81	s	RES, CHIP 10K
R207	1-218-965-81	s	RES, CHIP 10K
R208	1-218-937-81	s	RES, CHIP 47
R209	1-218-937-81	s	RES, CHIP 47
R210	1-218-937-81	s	RES, CHIP 47
R211	1-218-937-81	s	RES, CHIP 47
R212	1-218-937-81	s	RES, CHIP 47
R213	1-218-937-81	s	RES, CHIP 47
R214	1-218-937-81	s	RES, CHIP 47
R215	1-218-937-81	s	RES, CHIP 47
R216	1-218-990-81	s	CONDUCTOR, CHIP (1005)
R217	1-218-990-81	s	CONDUCTOR, CHIP (1005)
R218	1-218-990-81	s	CONDUCTOR, CHIP (1005)
R219	1-218-990-81	s	CONDUCTOR, CHIP (1005)
R220	1-218-990-81	s	CONDUCTOR, CHIP (1005)
R221	1-218-990-81	s	CONDUCTOR, CHIP (1005)
R222	1-218-990-81	s	CONDUCTOR, CHIP (1005)
R223	1-218-990-81	s	CONDUCTOR, CHIP (1005)
R224	1-218-953-81	s	RES, CHIP 1.0K
R225	1-218-990-81	s	CONDUCTOR, CHIP (1005)
R226	1-218-990-81	s	CONDUCTOR, CHIP (1005)
R227	1-218-990-81	s	CONDUCTOR, CHIP (1005)
R228	1-218-990-81	s	CONDUCTOR, CHIP (1005)
R229	1-218-990-81	s	CONDUCTOR, CHIP (1005)
R230	1-218-990-81	s	CONDUCTOR, CHIP (1005)
R231	1-218-990-81	s	CONDUCTOR, CHIP (1005)
R232	1-218-990-81	s	CONDUCTOR, CHIP (1005)
R233	1-218-953-81	s	RES, CHIP 1.0K
R234	1-218-961-81	s	RES, CHIP 4.7K
R235	1-218-961-81	s	RES, CHIP 4.7K
R236	1-218-965-81	s	RES, CHIP 10K
R237	1-218-965-81	s	RES, CHIP 10K
R238	1-218-961-81	s	RES, CHIP 4.7K
R239	1-218-961-81	s	RES, CHIP 4.7K
R240	1-208-911-81	s	RES, CHIP 10K (1005)
R241	1-208-911-81	s	RES, CHIP 10K (1005)
R244	1-218-961-81	s	RES, CHIP 4.7K
R245	1-218-961-81	s	RES, CHIP 4.7K
R246	1-218-961-81	s	RES, CHIP 4.7K
R247	1-218-961-81	s	RES, CHIP 4.7K
R250	1-218-961-81	s	RES, CHIP 4.7K
R251	1-218-961-81	s	RES, CHIP 4.7K
R252	1-218-961-81	s	RES, CHIP 4.7K
R253	1-218-961-81	s	RES, CHIP 4.7K
R254	1-218-990-81	s	CONDUCTOR, CHIP (1005)
R255	1-218-990-81	s	CONDUCTOR, CHIP (1005)
R256	1-218-990-81	s	CONDUCTOR, CHIP (1005)
R257	1-218-990-81	s	CONDUCTOR, CHIP (1005)

(Q BOARD)

Ref. No. or Q'ty	Part No.	SP	Description
R258	1-218-937-81	s	RES, CHIP 47
R259	1-208-699-81	s	RES,METAL FILM CHIP 4.7K(1005)
R260	1-218-965-81	s	RES, CHIP 10K
R261	1-218-965-81	s	RES, CHIP 10K
R262	1-218-961-81	s	RES, CHIP 4.7K
R263	1-218-961-81	s	RES, CHIP 4.7K
R264	1-218-961-81	s	RES, CHIP 4.7K
R265	1-218-961-81	s	RES, CHIP 4.7K
R266	1-218-961-81	s	RES, CHIP 4.7K
R267	1-218-961-81	s	RES, CHIP 4.7K
R270	1-218-937-81	s	RES, CHIP 47
R271	1-218-937-81	s	RES, CHIP 47
R272	1-218-937-81	s	RES, CHIP 47
R273	1-218-935-81	s	RES, CHIP 33
R275	1-218-989-81	s	RES, CHIP 1M
R276	1-218-990-81	s	CONDUCTOR, CHIP (1005)
R277	1-218-990-81	s	CONDUCTOR, CHIP (1005)
R278	1-218-937-81	s	RES, CHIP 47
R279	1-218-937-81	s	RES, CHIP 47
R280	1-218-953-81	s	RES, CHIP 1.0K
R281	1-218-953-81	s	RES, CHIP 1.0K
R282	1-218-961-81	s	RES, CHIP 4.7K
R283	1-218-961-81	s	RES, CHIP 4.7K
R284	1-218-961-81	s	RES, CHIP 4.7K
R285	1-218-961-81	s	RES, CHIP 4.7K
R286	1-218-961-81	s	RES, CHIP 4.7K
R287	1-208-923-81	s	RES, CHIP 33K (1005)
R288	1-208-923-81	s	RES, CHIP 33K (1005)
R289	1-218-990-81	s	CONDUCTOR, CHIP (1005)
R290	1-218-961-81	s	RES, CHIP 4.7K
R291	1-218-961-81	s	RES, CHIP 4.7K
R292	1-218-961-81	s	RES, CHIP 4.7K
R293	1-218-961-81	s	RES, CHIP 4.7K
R294	1-218-961-81	s	RES, CHIP 4.7K
R300	1-218-965-81	s	RES, CHIP 10K
R302	1-218-990-81	s	CONDUCTOR, CHIP (1005)
R303	1-218-990-81	s	CONDUCTOR, CHIP (1005)
R304	1-218-990-81	s	CONDUCTOR, CHIP (1005)
R305	1-218-941-81	s	RES, CHIP 100
R306	1-218-941-81	s	RES, CHIP 100
R307	1-218-941-81	s	RES, CHIP 100
R308	1-218-941-81	s	RES, CHIP 100
R309	1-218-941-81	s	RES, CHIP 100
R310	1-218-941-81	s	RES, CHIP 100
R311	1-218-990-81	s	CONDUCTOR, CHIP (1005)
R312	1-218-990-81	s	CONDUCTOR, CHIP (1005)
R313	1-218-990-81	s	CONDUCTOR, CHIP (1005)
R314	1-218-990-81	s	CONDUCTOR, CHIP (1005)
R315	1-218-990-81	s	CONDUCTOR, CHIP (1005)
R316	1-218-990-81	s	CONDUCTOR, CHIP (1005)
R317	1-218-990-81	s	CONDUCTOR, CHIP (1005)
R318	1-218-990-81	s	CONDUCTOR, CHIP (1005)
R319	1-220-196-81	s	RES, CHIP 13K
R320	1-220-196-81	s	RES, CHIP 13K
R321	1-220-196-81	s	RES, CHIP 13K
R322	1-218-935-81	s	RES, CHIP 33
R323	1-218-990-81	s	CONDUCTOR, CHIP (1005)
R324	1-218-990-81	s	CONDUCTOR, CHIP (1005)
R325	1-218-990-81	s	CONDUCTOR, CHIP (1005)

(Q BOARD)

Ref. No. or Q'ty	Part No.	SP	Description
R326	1-218-989-81	s	RES, CHIP 1M
R327	1-218-990-81	s	CONDUCTOR, CHIP (1005)
R328	1-208-931-81	s	RES, CHIP 68K (1005)
R329	1-218-933-81	s	RES, CHIP 22
R330	1-218-933-81	s	RES, CHIP 22
R331	1-208-711-11	s	RES, CHIP 15K (1005)
R400	1-208-711-11	s	RES, CHIP 15K (1005)
R401	1-208-880-81	s	RES, CHIP 510 (1005)
R403	1-208-935-81	s	RES, CHIP 100K (1005)
R404	1-208-931-81	s	RES, CHIP 68K (1005)
R405	1-208-683-11	s	RES, CHIP 1.0K (1005)
R406	1-218-982-11	s	RES, CHIP 270K (1005)
R407	1-208-721-11	s	RES, CHIP 39K (1005)
R408	1-208-943-81	s	RES, CHIP 220K (1005)
R409	1-218-941-81	s	RES, CHIP 100
R410	1-218-941-81	s	RES, CHIP 100
R411	1-218-965-81	s	RES, CHIP 10K
R412	1-218-941-81	s	RES, CHIP 100
R413	1-218-990-81	s	CONDUCTOR, CHIP (1005)
R414	1-218-965-81	s	RES, CHIP 10K
R500	1-218-933-81	s	RES, CHIP 22
R501	1-218-933-81	s	RES, CHIP 22
R502	1-218-933-81	s	RES, CHIP 22
R503	1-218-933-81	s	RES, CHIP 22
R504	1-218-933-81	s	RES, CHIP 22
R505	1-218-933-81	s	RES, CHIP 22
R506	1-218-933-81	s	RES, CHIP 22
R507	1-218-929-81	s	RES, CHIP 10
R508	1-218-929-81	s	RES, CHIP 10
R509	1-218-929-81	s	RES, CHIP 10
R510	1-218-929-81	s	RES, CHIP 10
R511	1-218-933-81	s	RES, CHIP 22
R512	1-218-933-81	s	RES, CHIP 22
R513	1-218-933-81	s	RES, CHIP 22
R514	1-218-933-81	s	RES, CHIP 22
R515	1-218-933-81	s	RES, CHIP 22
R516	1-218-933-81	s	RES, CHIP 22
R517	1-218-933-81	s	RES, CHIP 22
R518	1-218-933-81	s	RES, CHIP 22
R519	1-218-933-81	s	RES, CHIP 22
R520	1-218-933-81	s	RES, CHIP 22
R521	1-218-933-81	s	RES, CHIP 22
R522	1-218-990-81	s	CONDUCTOR, CHIP (1005)
R525	1-208-683-11	s	RES, CHIP 1.0K (1005)
R526	1-208-683-11	s	RES, CHIP 1.0K (1005)
R527	1-218-935-81	s	RES, CHIP 33
R528	1-218-935-81	s	RES, CHIP 33
R529	1-218-935-81	s	RES, CHIP 33
R530	1-218-935-81	s	RES, CHIP 33
R600	1-218-965-81	s	RES, CHIP 10K
R601	1-218-941-81	s	RES, CHIP 100
R602	1-218-943-81	s	RES, CHIP 150
R603	1-218-965-81	s	RES, CHIP 10K
R604	1-218-943-81	s	RES, CHIP 150
R605	1-218-965-81	s	RES, CHIP 10K
R606	1-218-965-81	s	RES, CHIP 10K
R607	1-218-965-81	s	RES, CHIP 10K
R609	1-218-965-81	s	RES, CHIP 10K
R611	1-218-965-81	s	RES, CHIP 10K

(Q BOARD)

Ref. No. or Q'ty	Part No.	SP	Description
R613	1-218-965-81	s	RES, CHIP 10K
R614	1-218-990-81	s	CONDUCTOR, CHIP (1005)
R615	1-218-990-81	s	CONDUCTOR, CHIP (1005)
R616	1-218-990-81	s	CONDUCTOR, CHIP (1005)
R617	1-218-990-81	s	CONDUCTOR, CHIP (1005)
R619	1-218-965-81	s	RES, CHIP 10K
R620	1-218-965-81	s	RES, CHIP 10K
R621	1-218-965-81	s	RES, CHIP 10K
R622	1-218-965-81	s	RES, CHIP 10K
R623	1-218-965-81	s	RES, CHIP 10K
R624	1-218-941-81	s	RES, CHIP 100
R625	1-218-941-81	s	RES, CHIP 100
R626	1-218-941-81	s	RES, CHIP 100
R627	1-218-941-81	s	RES, CHIP 100
R628	1-218-941-81	s	RES, CHIP 100
R630	1-218-973-81	s	RES, CHIP 47K
R631	1-218-953-81	s	RES, CHIP 1.0K
R632	1-218-973-81	s	RES, CHIP 47K
R633	1-218-965-81	s	RES, CHIP 10K
R634	1-218-965-81	s	RES, CHIP 10K
R635	1-218-965-81	s	RES, CHIP 10K
R637	1-218-965-81	s	RES, CHIP 10K
R638	1-218-965-81	s	RES, CHIP 10K
R639	1-218-965-81	s	RES, CHIP 10K
R640	1-218-965-81	s	RES, CHIP 10K
R642	1-218-990-81	s	CONDUCTOR, CHIP (1005)
R644	1-218-990-81	s	CONDUCTOR, CHIP (1005)
R645	1-218-990-81	s	CONDUCTOR, CHIP (1005)
R650	1-218-990-81	s	CONDUCTOR, CHIP (1005)
R656	1-218-965-81	s	RES, CHIP 10K
R657	1-218-965-81	s	RES, CHIP 10K
R661	1-218-935-81	s	RES, CHIP 33
R662	1-218-937-81	s	RES, CHIP 47
R663	1-218-965-81	s	RES, CHIP 10K
R664	1-218-933-81	s	RES, CHIP 22
R665	1-218-933-81	s	RES, CHIP 22
R666	1-218-957-81	s	RES, CHIP 2.2K
R667	1-218-957-81	s	RES, CHIP 2.2K
R668	1-218-990-81	s	CONDUCTOR, CHIP (1005)
R669	1-218-941-81	s	RES, CHIP 100
R673	1-218-933-81	s	RES, CHIP 22
R674	1-218-933-81	s	RES, CHIP 22
R675	1-218-973-81	s	RES, CHIP 47K
R676	1-218-973-81	s	RES, CHIP 47K
R677	1-218-933-81	s	RES, CHIP 22
R678	1-218-973-81	s	RES, CHIP 47K
R679	1-218-973-81	s	RES, CHIP 47K
R680	1-218-941-81	s	RES, CHIP 100
R681	1-218-965-81	s	RES, CHIP 10K
R682	1-218-990-81	s	CONDUCTOR, CHIP (1005)
R683	1-218-990-81	s	CONDUCTOR, CHIP (1005)
R684	1-218-990-81	s	CONDUCTOR, CHIP (1005)
R685	1-208-893-81	s	RES, CHIP 1.8K (1005)
R686	1-218-957-81	s	RES, CHIP 2.2K
R687	1-218-965-81	s	RES, CHIP 10K
R688	1-218-965-81	s	RES, CHIP 10K
R689	1-218-941-81	s	RES, CHIP 100
R690	1-218-965-81	s	RES, CHIP 10K
R691	1-218-965-81	s	RES, CHIP 10K

(Q BOARD)

Ref. No. or Q'ty	Part No.	SP	Description
R692	1-208-699-11	s	RES, CHIP 4.7K (1005)
R693	1-208-699-11	s	RES, CHIP 4.7K (1005)
R694	1-208-699-11	s	RES, CHIP 4.7K (1005)
R695	1-218-989-81	s	RES, CHIP 1M
R696	1-218-990-81	s	CONDUCTOR, CHIP (1005)
R697	1-218-965-81	s	RES, CHIP 10K
R703	1-218-973-81	s	RES, CHIP 47K
R704	1-218-973-81	s	RES, CHIP 47K
R705	1-218-962-81	s	RES, CHIP 5.6K
R706	1-218-965-81	s	RES, CHIP 10K
R707	1-218-965-81	s	RES, CHIP 10K
R708	1-218-941-81	s	RES, CHIP 100
R709	1-218-941-81	s	RES, CHIP 100
R710	1-218-941-81	s	RES, CHIP 100
R711	1-218-973-81	s	RES, CHIP 47K
R712	1-218-973-81	s	RES, CHIP 47K
R713	1-218-953-81	s	RES, CHIP 1.0K
R714	1-218-973-81	s	RES, CHIP 47K
R716	1-208-707-81	s	RES, METAL FILM CHIP 10K(1005)
R718	1-218-973-81	s	RES, CHIP 47K
R719	1-208-707-81	s	RES, METAL FILM CHIP 10K(1005)
R720	1-218-973-81	s	RES, CHIP 47K
R721	1-218-973-81	s	RES, CHIP 47K
R724	1-218-965-81	s	RES, CHIP 10K
R725	1-218-933-81	s	RES, CHIP 22
R726	1-218-933-81	s	RES, CHIP 22
R729	1-218-961-81	s	RES, CHIP 4.7K
R731	1-218-933-81	s	RES, CHIP 22
R732	1-218-961-81	s	RES, CHIP 4.7K
R733	1-218-965-81	s	RES, CHIP 10K
R734	1-218-965-81	s	RES, CHIP 10K
R735	1-218-965-81	s	RES, CHIP 10K
R736	1-218-965-81	s	RES, CHIP 10K
R737	1-218-965-81	s	RES, CHIP 10K
R738	1-218-937-81	s	RES, CHIP 47
R740	1-218-941-81	s	RES, CHIP 100
R741	1-218-941-81	s	RES, CHIP 100
R742	1-218-990-81	s	CONDUCTOR, CHIP (1005)
R743	1-218-990-81	s	CONDUCTOR, CHIP (1005)
R744	1-218-941-81	s	RES, CHIP 100
R745	1-218-989-81	s	RES, CHIP 1M
R746	1-218-965-81	s	RES, CHIP 10K
R747	1-218-929-81	s	RES, CHIP 10
R749	1-218-965-81	s	RES, CHIP 10K
R750	1-218-941-81	s	RES, CHIP 100
R751	1-218-941-81	s	RES, CHIP 100
R752	1-218-941-81	s	RES, CHIP 100
R753	1-218-965-81	s	RES, CHIP 10K
R754	1-218-941-81	s	RES, CHIP 100
R755	1-218-941-81	s	RES, CHIP 100
R756	1-218-941-81	s	RES, CHIP 100
R757	1-218-973-81	s	RES, CHIP 47K
R763	1-208-901-81	s	RES, CHIP 3.9K (1005)
R764	1-208-683-11	s	RES, CHIP 1.0K (1005)
R765	1-218-941-81	s	RES, CHIP 100
R766	1-218-941-81	s	RES, CHIP 100
R768	1-218-953-81	s	RES, CHIP 1.0K
R769	1-218-941-81	s	RES, CHIP 100
R771	1-218-941-81	s	RES, CHIP 100

(Q BOARD)

Ref. No. or Q'ty	Part No.	SP	Description
R772	1-218-941-81	s	RES, CHIP 100
R773	1-218-941-81	s	RES, CHIP 100
R774	1-218-941-81	s	RES, CHIP 100
R775	1-218-990-81	s	CONDUCTOR, CHIP (1005)
R776	1-218-990-81	s	CONDUCTOR, CHIP (1005)
R777	1-218-990-81	s	CONDUCTOR, CHIP (1005)
R778	1-218-990-81	s	CONDUCTOR, CHIP (1005)
R779	1-218-977-81	s	RES, CHIP 100K
R780	1-218-961-81	s	RES, CHIP 4.7K
R781	1-218-961-81	s	RES, CHIP 4.7K
R788	1-208-707-81	s	RES, METAL FILM CHIP 10K(1005)
R789	1-208-707-81	s	RES, METAL FILM CHIP 10K(1005)
R758	1-218-965-81	s	RES, CHIP 10K
RB400	1-234-370-21	s	RES, NETWORK 22 (1005X4)
RB401	1-234-370-21	s	RES, NETWORK 22 (1005X4)
RB500	1-234-370-21	s	RES, NETWORK 22 (1005X4)
RB501	1-234-370-21	s	RES, NETWORK 22 (1005X4)
RB502	1-234-370-21	s	RES, NETWORK 22 (1005X4)
RB503	1-234-369-21	s	RES, NETWORK 10 (1005X4)
RB504	1-234-369-21	s	RES, NETWORK 10 (1005X4)
RB505	1-234-369-21	s	RES, NETWORK 10 (1005X4)
RB506	1-234-369-21	s	RES, NETWORK 10 (1005X4)
RB507	1-234-369-21	s	RES, NETWORK 10 (1005X4)
RB508	1-234-369-21	s	RES, NETWORK 10 (1005X4)
RB509	1-234-369-21	s	RES, NETWORK 10 (1005X4)
RB510	1-234-369-21	s	RES, NETWORK 10 (1005X4)
RB511	1-242-963-21	s	RES, NETWORK 33 (1005X4)
RB512	1-242-963-21	s	RES, NETWORK 33 (1005X4)
RB513	1-242-963-21	s	RES, NETWORK 33 (1005X4)
RB514	1-242-963-21	s	RES, NETWORK 33 (1005X4)
RB515	1-242-963-21	s	RES, NETWORK 33 (1005X4)
RB516	1-242-963-21	s	RES, NETWORK 33 (1005X4)
RB517	1-242-963-21	s	RES, NETWORK 33 (1005X4)
RB518	1-242-963-21	s	RES, NETWORK 33 (1005X4)
RB601	1-234-378-21	s	RES, NETWORK 10K (1005X4)
RB602	1-234-370-21	s	RES, NETWORK 22 (1005X4)
RB603	1-234-377-21	s	RES, NETWORK 4.7K (1005X4)
RB604	1-234-372-21	s	RES, NETWORK 100 (1005X4)
RB605	1-234-372-21	s	RES, NETWORK 100 (1005X4)
RB606	1-234-372-21	s	RES, NETWORK 100 (1005X4)
RB607	1-234-372-21	s	RES, NETWORK 100 (1005X4)
RB608	1-234-372-21	s	RES, NETWORK 100 (1005X4)
RB609	1-234-372-21	s	RES, NETWORK 100 (1005X4)
RB610	1-234-372-21	s	RES, NETWORK 100 (1005X4)
RB611	1-234-372-21	s	RES, NETWORK 100 (1005X4)
RB700	1-234-370-21	s	RES, NETWORK 22 (1005X4)
RB701	1-234-372-21	s	RES, NETWORK 100 (1005X4)
RB702	1-234-370-21	s	RES, NETWORK 22 (1005X4)
RB703	1-234-370-21	s	RES, NETWORK 22 (1005X4)
RB704	1-234-370-21	s	RES, NETWORK 22 (1005X4)
RB705	1-234-372-21	s	RES, NETWORK 100 (1005X4)
TP100	1-535-757-21	s	CHIP, CHECKER
TP101	1-535-757-21	s	CHIP, CHECKER
TP102	1-535-757-21	s	CHIP, CHECKER
TP200	1-535-757-21	s	CHIP, CHECKER
TP201	1-535-757-21	s	CHIP, CHECKER
TP600	1-535-757-21	s	CHIP, CHECKER
TP700	1-535-757-21	s	CHIP, CHECKER

(Q BOARD)

Ref. No. or Q'ty	Part No.	SP	Description
TP701	1-535-757-21	s	CHIP, CHECKER
TP702	1-535-757-21	s	CHIP, CHECKER
VDR204	1-802-105-11	s	CHIP VARISTOR
VDR209	1-802-105-11	s	CHIP VARISTOR
VDR210	1-802-105-11	s	CHIP VARISTOR
VDR211	1-802-105-11	s	CHIP VARISTOR
X100	1-795-416-21	s	VIBRATOR, CRYSTAL (33 MHz)
X200	1-813-267-11	s	VIBRATOR, CRYSTAL (27 MHz)
X300	1-813-267-11	s	VIBRATOR, CRYSTAL (27 MHz)
X600	1-813-267-11	s	VIBRATOR, CRYSTAL (27 MHz)
X700	1-813-326-21	s	VIBRATOR, CRYSTAL (16.384 MHz)

TA BOARD

Ref. No. or Q'ty	Part No.	SP	Description
1pc	A-1187-002-A	s	MOUNTED CIRCUIT BOARD, TA
C70	1-107-820-81	s	CAP, CHIP CERAMIC 100000PF F
CN70	1-785-946-21	s	CONNECTOR 3P
S70	1-570-504-12	s	SWITCH, MICRO
TH70	1-803-382-11	s	THERMISTOR (10K)

TL BOARD

Ref. No. or Q'ty	Part No.	SP	Description
1pc	A-1187-003-A	s	MOUNTED CIRCUIT BOARD, TL
C75	1-107-820-81	s	CAP, CHIP CERAMIC 100000PF F
CN75	1-784-650-21	s	CONNECTOR 2P
TH75	1-803-382-11	s	THERMISTOR (10K)

U BOARD

Ref. No. or Q'ty	Part No.	SP	Description
1pc	A-1187-004-A	s	MOUNTED CIRCUIT BOARD, U
CN20	1-770-619-21	s	PIN, CONNECTOR 2P
S20	1-570-504-12	s	SWITCH, MICRO

SUPPLIED ACCESSORIES

Ref. No. or Q'ty	Part No.	SP	Description
1pc	1-479-620-11	s	REMOTE COMMANDER (RM-PJVW100)
1pc	9-885-028-14	s	COVER, BATTERY(FOR RM-PJVW100)
1pc	⚠ 1-819-729-13	s	INLET, AC (WITH NOISE FILTER)
1pc	⚠ ----------	s	CORD, POWER (Refer to 1-8. Warning on Power Connection)
1pc	2-887-661-01	s	MANUAL, INSTRUCTION(JAPANESE)
1pc	2-887-661-11	s	MANUAL, INSTRUCTION(ENGLISH)
1pc	2-887-661-21	s	MANUAL, INSTRUCTION(FRENCH,SPANISH, GERMAN,ITALIAN)
1pc	4-099-346-04	s	PACK, CD-ROM

Section 5
Block Diagrams

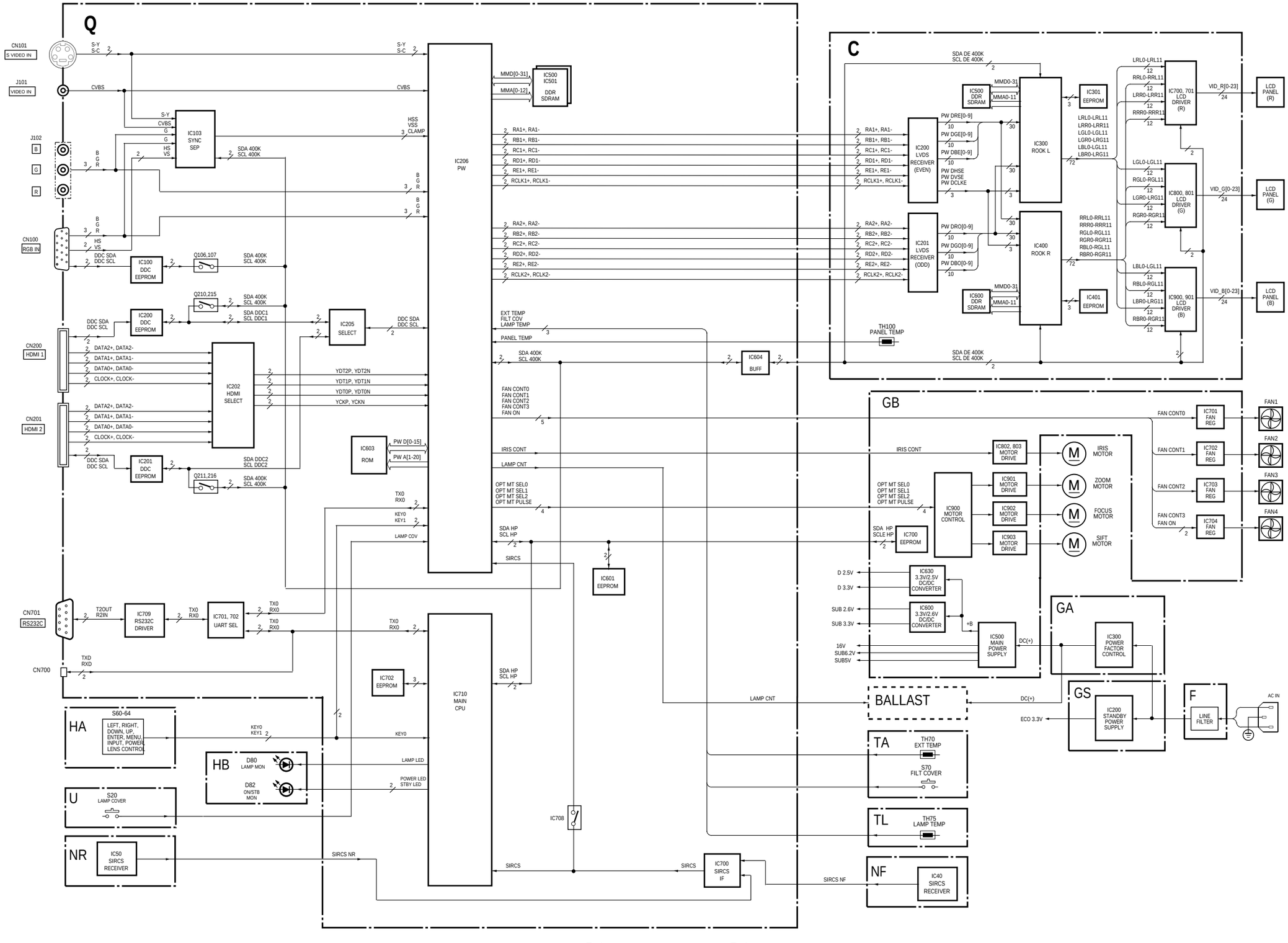

Q (1/2)

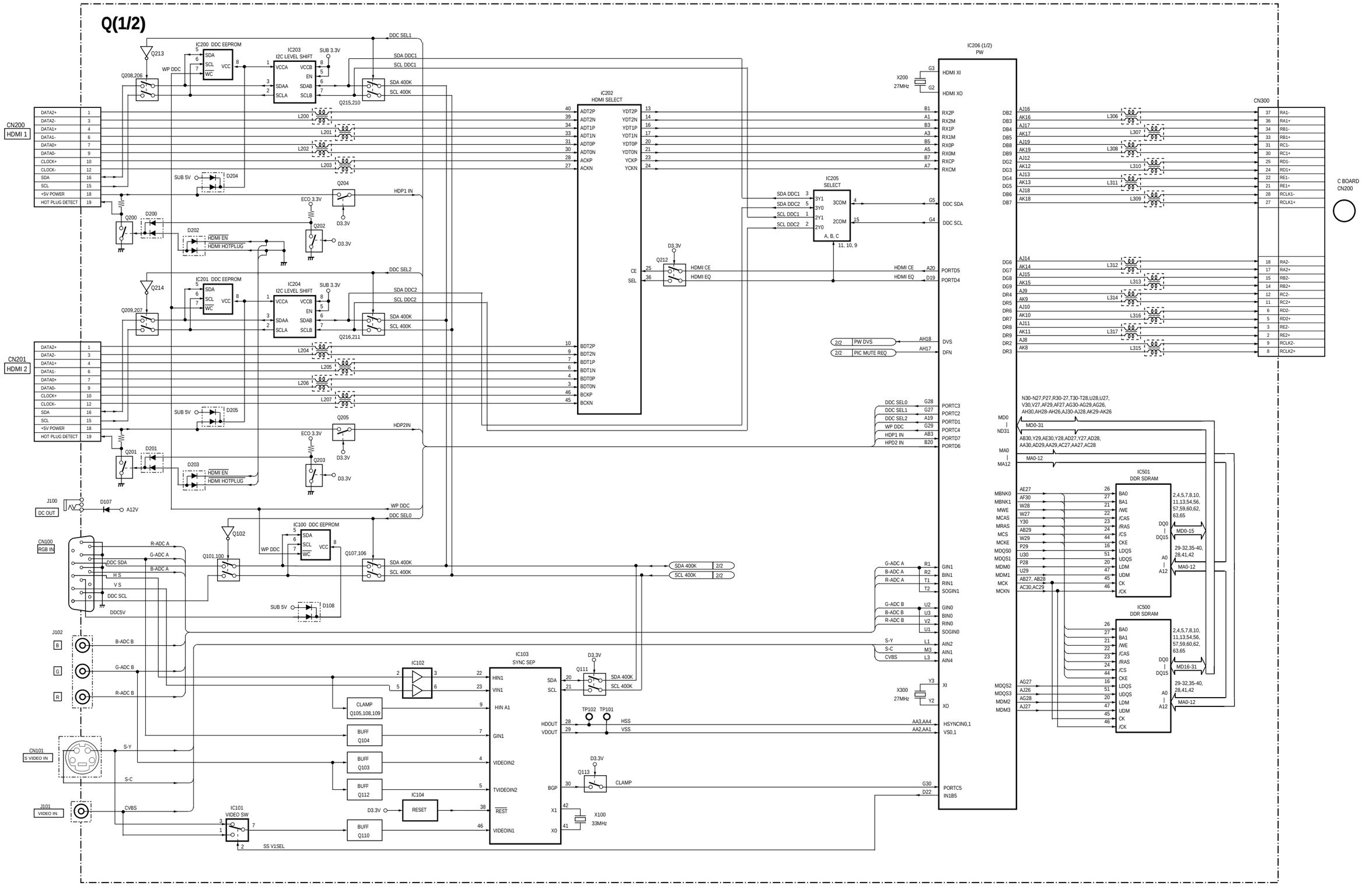
Q(1/2)
IC200 DDC EEPROM
IC203 I2C LEVEL SHIFT
IC201 DDC EEPROM
IC204 I2C LEVEL SHIFT
IC100 DDC EEPROM
IC202 HDMI SELECT
IC205 SELECT
IC206 (1/2) PW
IC501 DDR SDRAM
IC500 DDR SDRAM
IC103 SYNC SEP
IC102
IC104 RESET
IC101 VIDEO SW
CN200 HDMI 1
CN201 HDMI 2
CN300
C BOARD CN200
CN100 RGB IN
CN101 S VIDEO IN
J100 DC OUT
J101 VIDEO IN
J102
X200 27MHz
X300 27MHz
X100 33MHz
DDC SEL1
SDA DDC1
SCL DDC1
SDA DDC2
SCL DDC2
DDC SEL2
SDA 400K
SCL 400K
WP DDC
DDC SEL0
HDP1 IN
HDP2IN
HDMI EN
HDMI HOTPLUG
HDMI CE
HDMI EQ
CLAMP
SS V1SEL
HSS
VSS
DDC SDA
DDC SCL
DVS
DFN
PW DVS
PIC MUTE REQ
MD0-31
MA0-12
MD0-15
MD16-31
HSYNCIN0,1
VS0,1
PORTC5
IN1B5

5-2

 Q (2/2), HA, HB, NF, NR, TA, TL, U

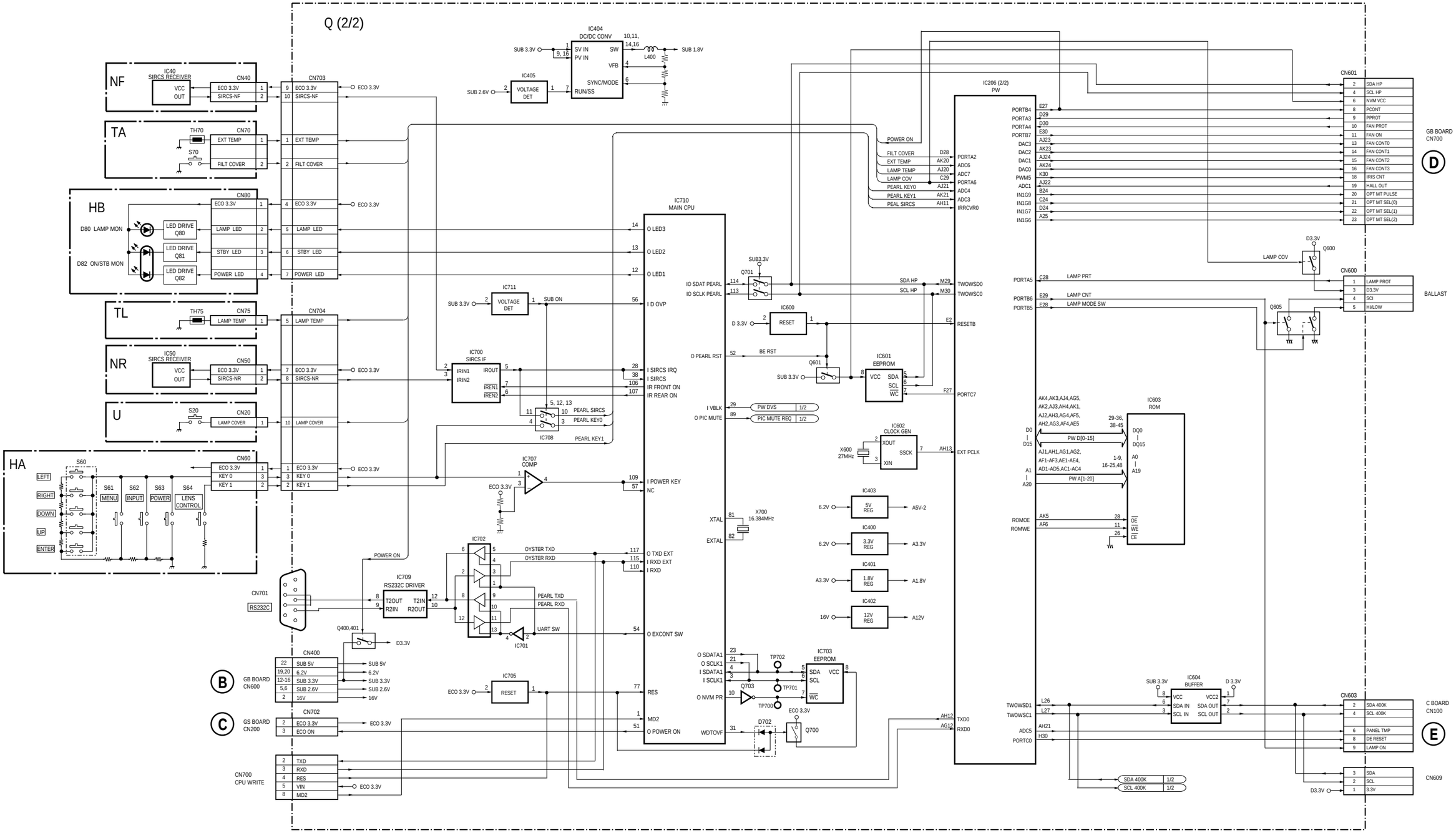

 5-3

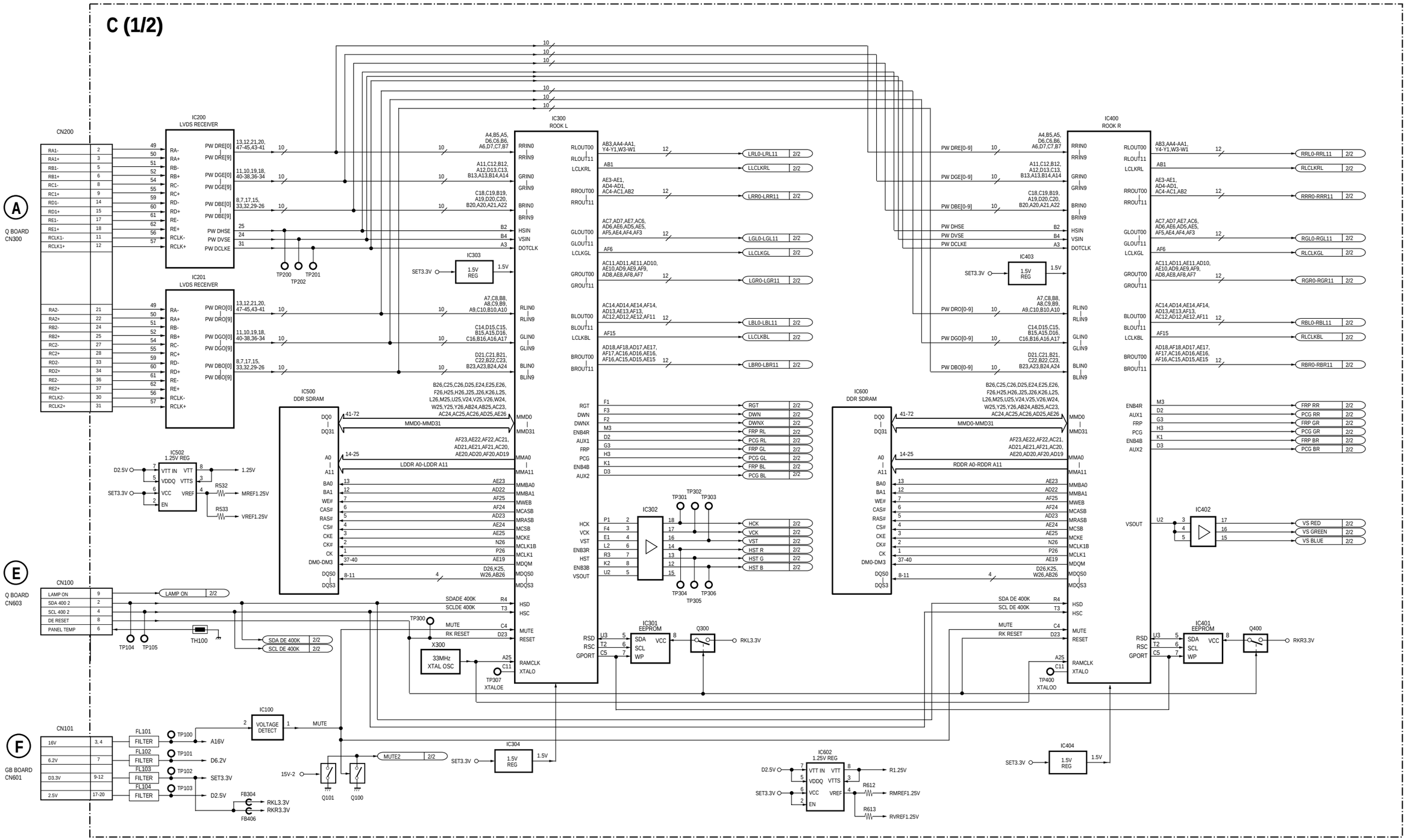
C (1/2)
A
Q BOARD
CN300
CN200
IC200
LVDS RECEIVER
IC201
LVDS RECEIVER
IC300
ROOK L
IC400
ROOK R
IC500
DDR SDRAM
IC600
DDR SDRAM
IC502
1.25V REG
IC303
1.5V REG
IC403
1.5V REG
IC302
IC301
EEPROM
IC401
EEPROM
IC402
Q300
Q400
X300
33MHz XTAL OC
E
Q BOARD
CN603
CN100
LAMP ON
SDA 400 2
SCL 400 2
DE RESET
PANEL TEMP
TH100
TP104
TP105
F
GB BOARD
CN601
CN101
16V
6.2V
D3.3V
2.5V
FILTER
IC100
VOLTAGE DETECT
MUTE
A16V
D6.2V
SET3.3V
D2.5V
FB304
FB406
RKL3.3V
RKR3.3V
Q101
Q100
15V-2
MUTE2
IC304
1.5V REG
IC602
1.25V REG
R1.25V
RMREF1.25V
RVREF1.25V
IC404
1.5V REG
1.25V
MREF1.25V
VREF1.25V
TP200
TP201
TP202
TP300
TP301
TP302
TP303
TP304
TP305
TP306
TP307
XTALOE
TP400
XTALOO
LRL0-LRL11
LLCLKRL
LRR0-LRR11
LGL0-LGL11
LLCLKGL
LGR0-LGR11
LBL0-LBL11
LLCLKBL
LBR0-LBR11
RGT
DWN
DWNX
FRP RL
PCG RL
FRP GL
PCG GL
FRP BL
PCG BL
HCK
VCK
VST
HST R
HST G
HST B
RRL0-RRL11
RLCLKRL
RRR0-RRR11
RGL0-RGL11
RLCLKGL
RGR0-RGR11
RBL0-RBL11
RLCLKBL
RBR0-RBR11
FRP RR
PCG RR
FRP GR
PCG GR
FRP BR
PCG BR
VS RED
VS GREEN
VS BLUE
SDA DE 400K
SCL DE 400K
MUTE
RK RESET
RKL3.3V
RKR3.3V

C (2/2)

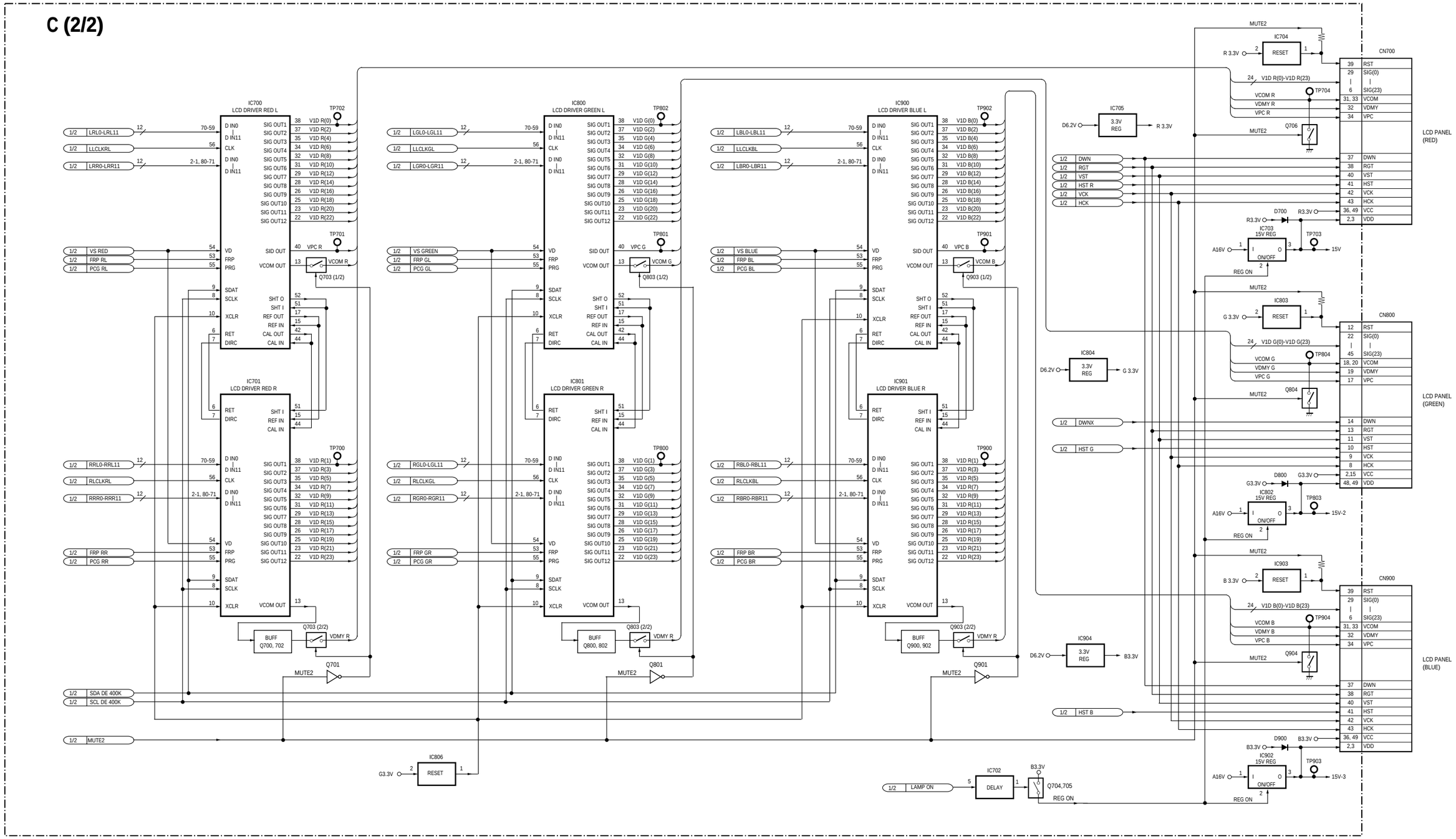
C (2/2)
IC700
LCD DRIVER RED L
IC701
LCD DRIVER RED R
IC800
LCD DRIVER GREEN L
IC801
LCD DRIVER GREEN R
IC900
LCD DRIVER BLUE L
IC901
LCD DRIVER BLUE R
CN700
LCD PANEL (RED)
CN800
LCD PANEL (GREEN)
CN900
LCD PANEL (BLUE)
IC704
IC705
IC803
IC804
IC703
IC802
IC903
IC904
IC902
IC806
IC702
BUFF Q700, 702
BUFF Q800, 802
BUFF Q900, 902
MUTE2
REG ON
LAMP ON
DELAY
RESET
ON/OFF

5-5

 GA, GB (1/2), GS, F

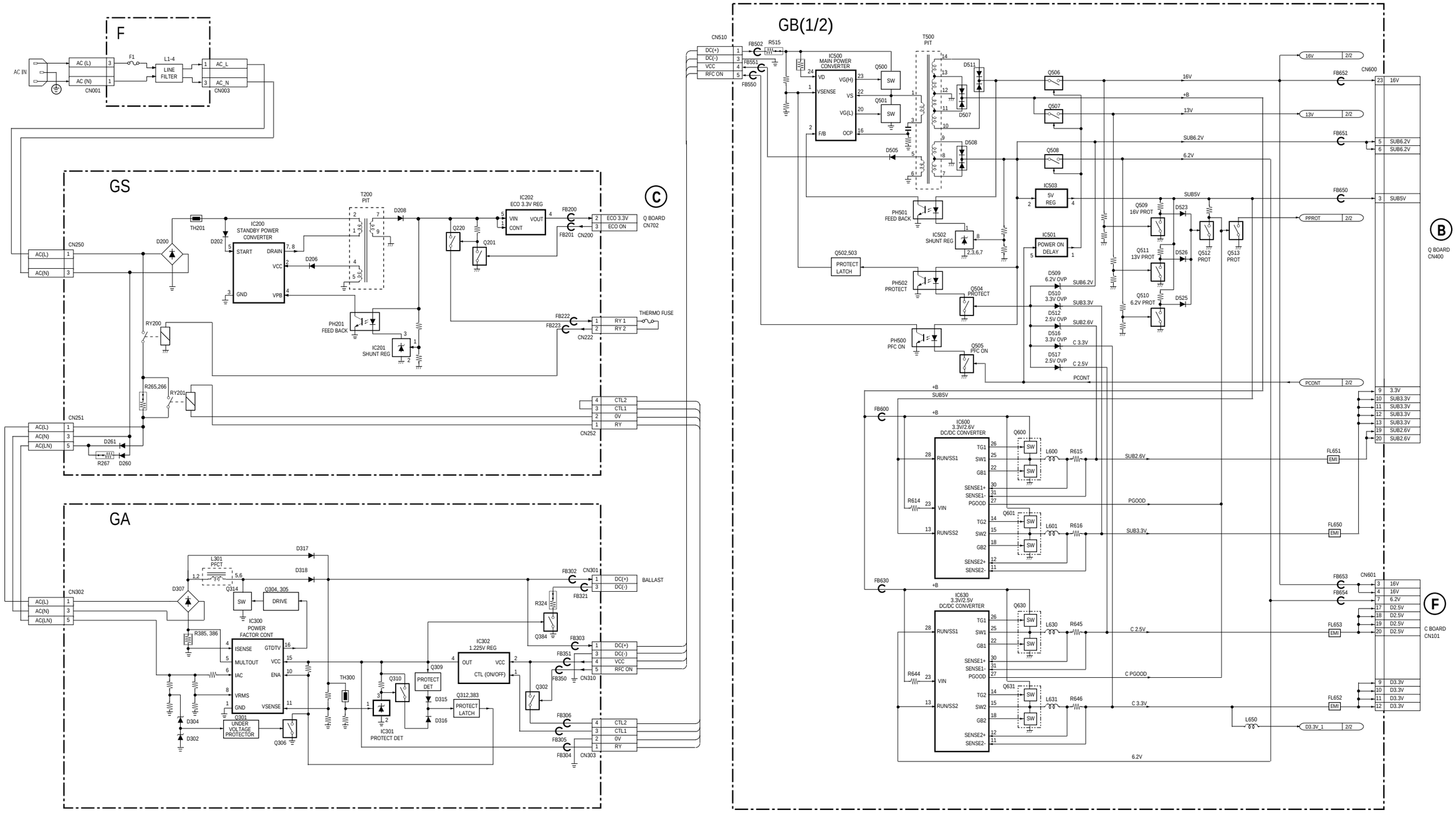

 5-6

GB (2/2)

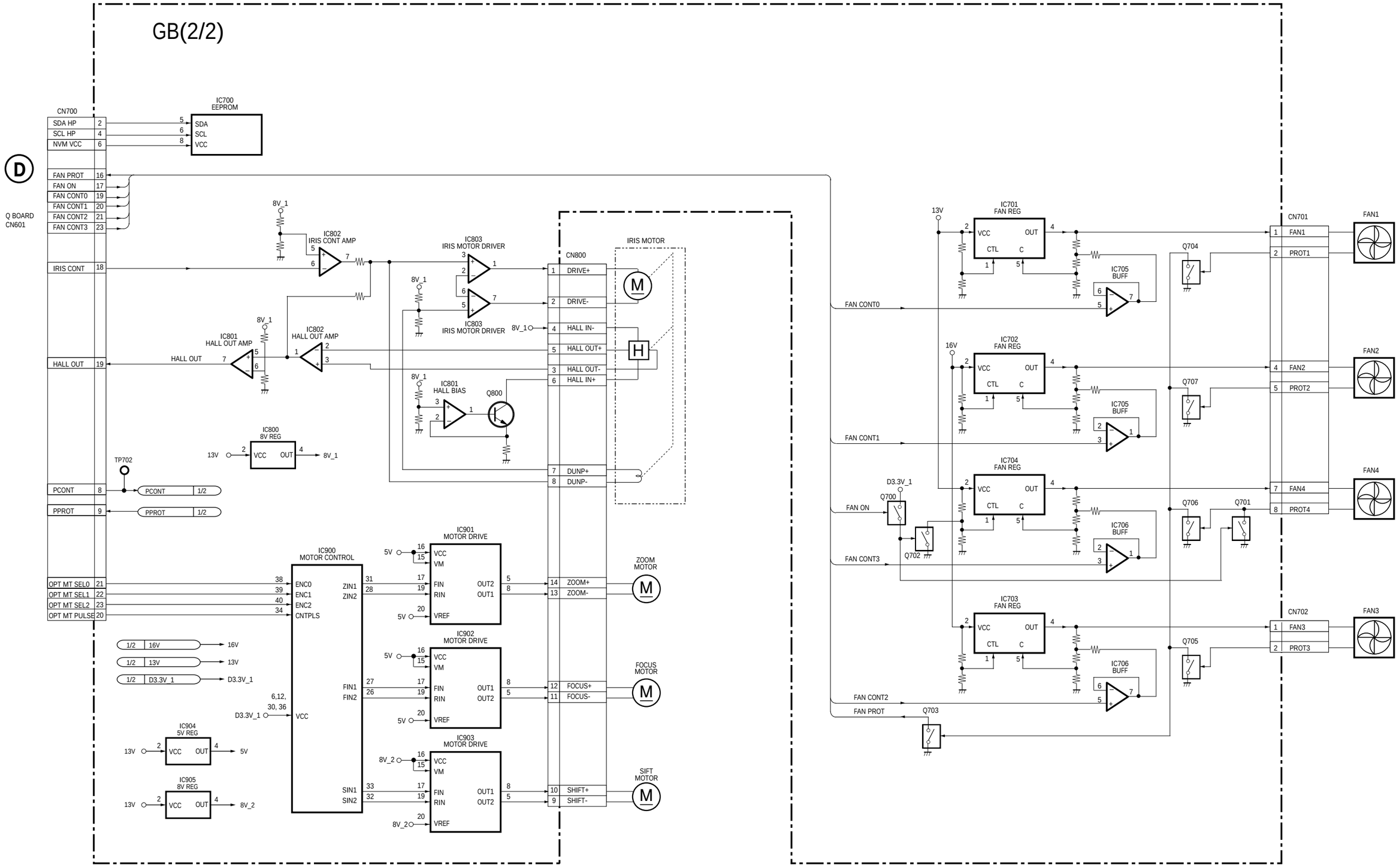
GB(2/2)
D
Q BOARD
CN601
CN700
SDA HP 2
SCL HP 4
NVM VCC 6
FAN PROT 16
FAN ON 17
FAN CONT0 19
FAN CONT1 20
FAN CONT2 21
FAN CONT3 23
IRIS CONT 18
HALL OUT 19
PCONT 8
PPROT 9
OPT MT SEL0 21
OPT MT SEL1 22
OPT MT SEL2 23
OPT MT PULSE 20
IC700
EEPROM
SDA
SCL
VCC
IC802
IRIS CONT AMP
IC803
IRIS MOTOR DRIVER
IC801
HALL OUT AMP
IC802
HALL OUT AMP
IC801
HALL BIAS
Q800
IC800
8V REG
TP702
PCONT 1/2
PPROT 1/2
CN800
DRIVE+
DRIVE-
HALL IN-
HALL OUT+
HALL OUT-
HALL IN+
DUNP+
DUNP-
IRIS MOTOR
IC900
MOTOR CONTROL
ENC0
ENC1
ENC2
CNTPLS
ZIN1
ZIN2
FIN1
FIN2
SIN1
SIN2
VCC
IC901
MOTOR DRIVE
IC902
MOTOR DRIVE
IC903
MOTOR DRIVE
VCC
VM
FIN
RIN
VREF
OUT1
OUT2
ZOOM+
ZOOM-
ZOOM MOTOR
FOCUS+
FOCUS-
FOCUS MOTOR
SHIFT+
SHIFT-
SIFT MOTOR
1/2 16V
1/2 13V
1/2 D3.3V_1
IC904
5V REG
IC905
8V REG
IC701
FAN REG
IC702
FAN REG
IC704
FAN REG
IC703
FAN REG
VCC
OUT
CTL
C
IC705
BUFF
IC706
BUFF
Q704
Q707
Q706
Q701
Q705
Q700
Q702
Q703
D3.3V_1
CN701
FAN1
PROT1
FAN2
PROT2
FAN4
PROT4
CN702
FAN3
PROT3
FAN CONT0
FAN CONT1
FAN ON
FAN CONT3
FAN CONT2
FAN PROT

5-7

Section 6
Diagrams

Index

Board Name	Function	Page
Q	Main Signal Processor	6-3
C	Panel Drive	6-12
F	EMC Filter	6-23
GA	Active Filter	6-25
GB	Main Power Supply	6-28
GS	Standby Power Supply	6-35
HA	Control Panel	6-37
HB	Indicator	6-38
NF	Front IR	6-39
NR	Rear IR	6-39
TA	Thermostat Sensor	6-40
TL	Thermostat Sensor	6-40
U	Lamp Cover	6-41

6-1

6-1. Frame Schematic Diagrams

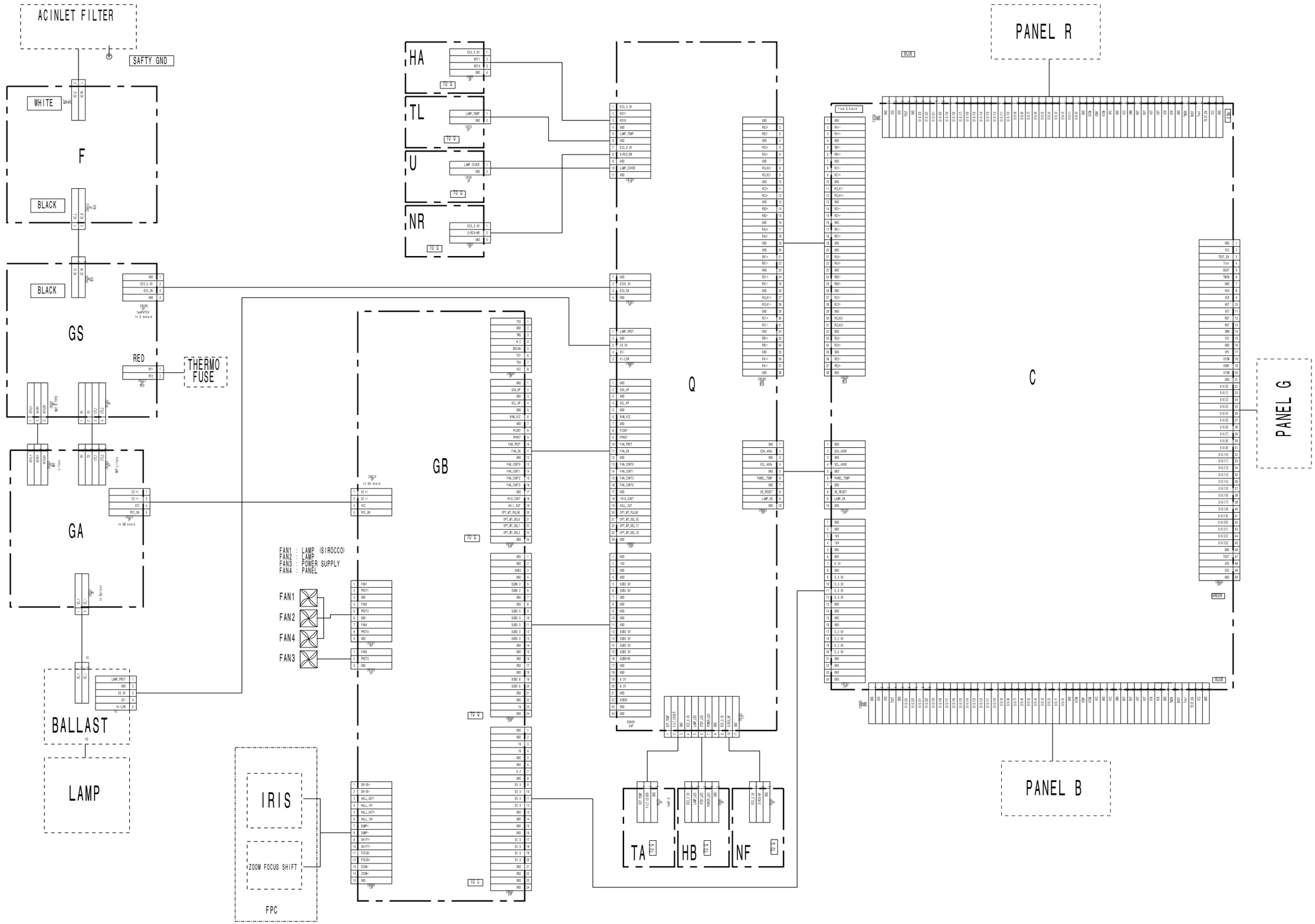

6-2. Schematic Diagrams and Printed Wiring Boards

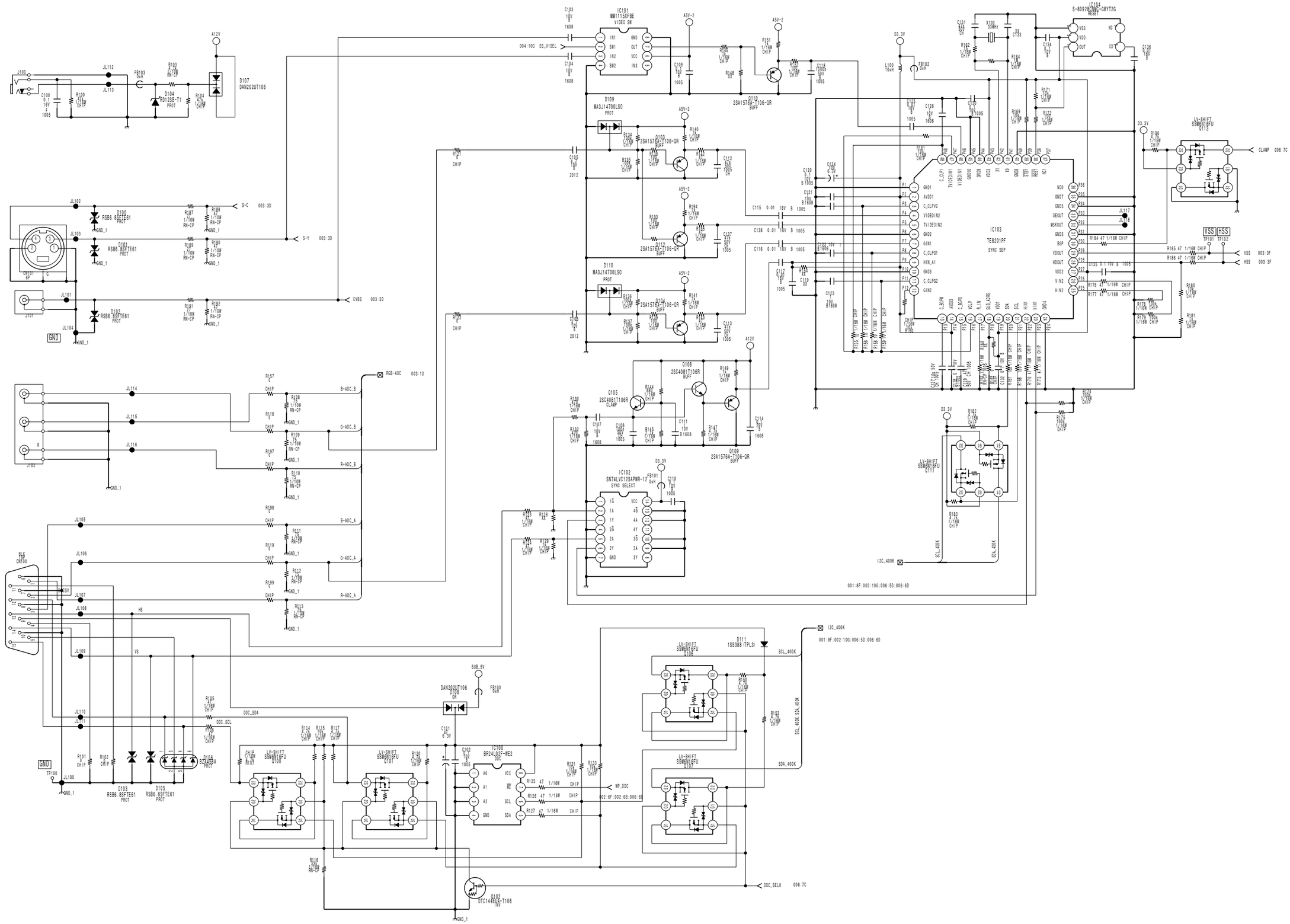

Q (2/7)

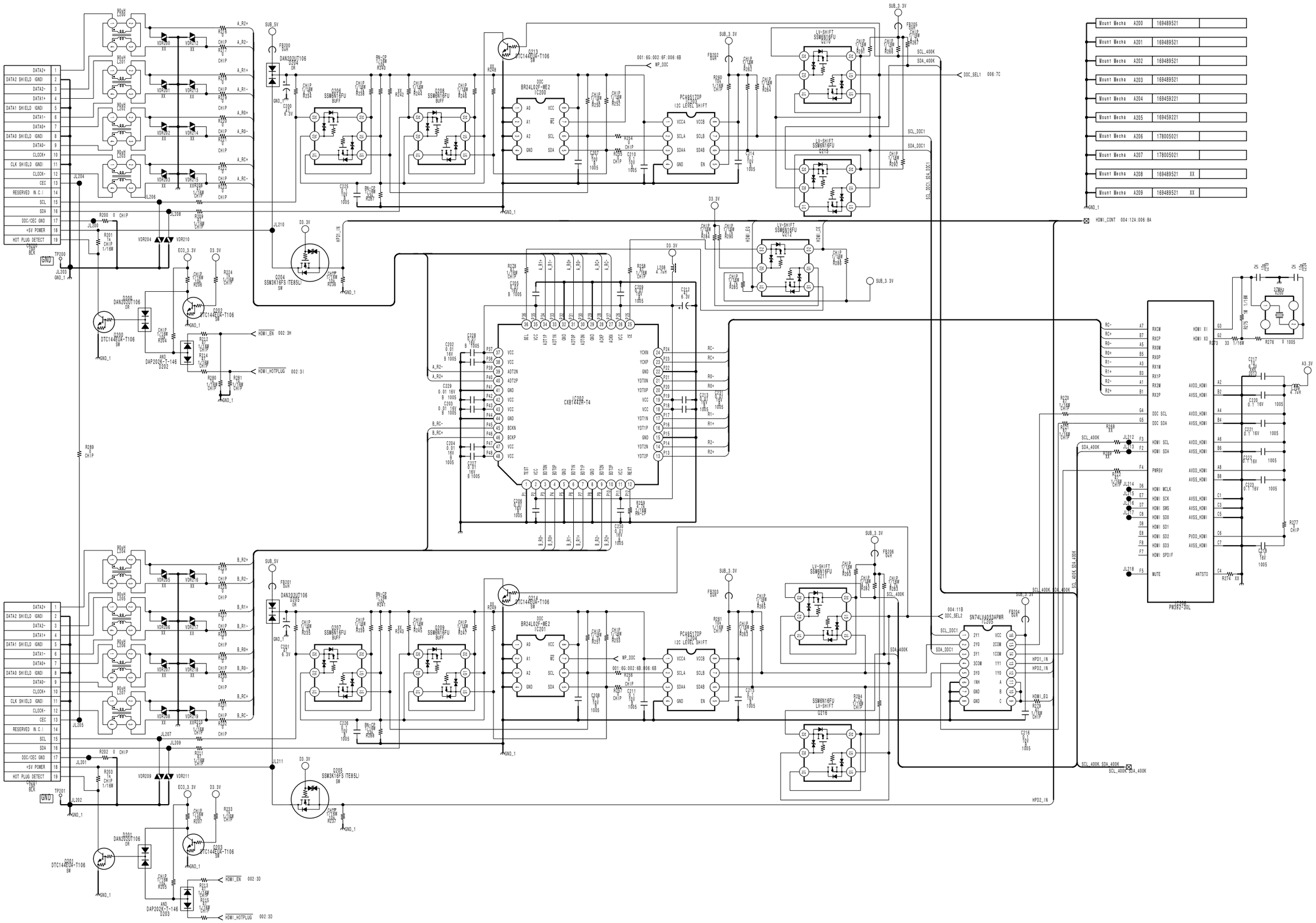
Mount Mecha A200 169489521
Mount Mecha A201 169489521
Mount Mecha A202 169489521
Mount Mecha A203 169489521
Mount Mecha A204 169459221
Mount Mecha A205 169459221
Mount Mecha A206 178005021
Mount Mecha A207 178005021
Mount Mecha A208 169489521 XX
Mount Mecha A209 169489521 XX
IC202 CX8/442R-T4
IC200 BR24L02F-WE2
IC201 PCA9517DP
IC203 PM392-30L
IC204 SN74LV4053APWR
Q204 SSM3K16FS (TE85L)
Q205 SSM3K16FS (TE85L)
Q206 SSM6N16FU
Q207 SSM6N16FU
Q208 SSM6N16FU
Q209 SSM6N16FU
Q210 SSM6N16FU
Q211 SSM6N16FU
Q212 SSM6N16FU
Q213 SSM6N16FU
Q214 DTC144EUA-T106
Q215 DTC144EUA-T106
Q216 DTC144EUA-T106
Q217 DTC144EUA-T106
Q218 DTC144EUA-T106
Q219 DTC144EUA-T106
Q220 DTC144EUA-T106
Q221 DTC144EUA-T106
Q222 DTC144EUA-T106
Q223 DTC144EUA-T106
Q224 DTC144EUA-T106
Q225 DTC144EUA-T106
Q226 DTC144EUA-T106
Q227 DTC144EUA-T106
Q228 DTC144EUA-T106
Q229 DTC144EUA-T106
Q230 DTC144EUA-T106
Q231 DTC144EUA-T106
Q232 DTC144EUA-T106
Q233 DTC144EUA-T106

Q (3/7)

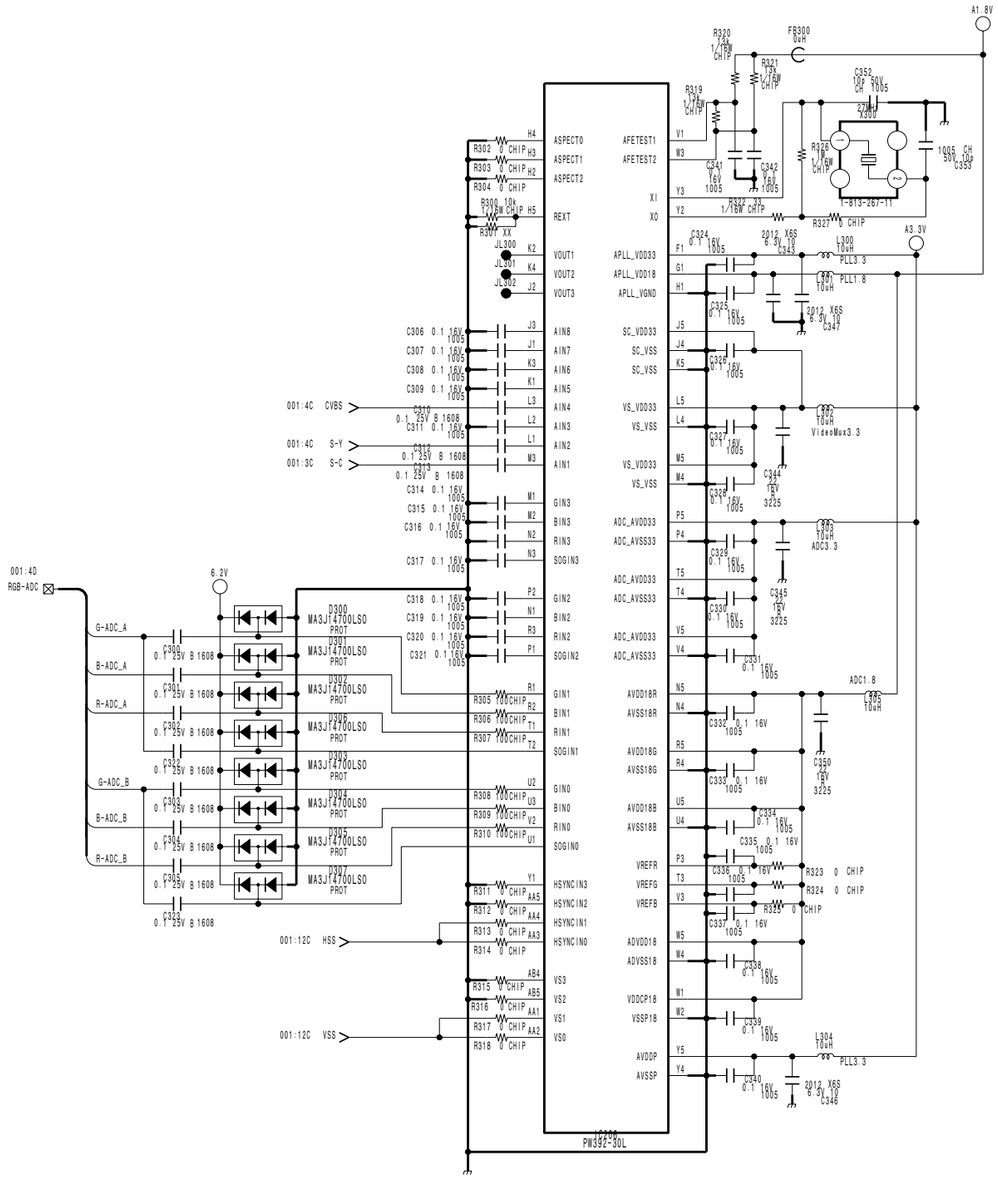
IC206
PW392-30L
LVDS
CN300
JL311
PW_DVS
007:10F
PIC_MUTE_REQ
007:7C
001:4C CVBS
001:4C S-Y
001:3C S-C
001:12C HSS
001:12C VSS
001:4D
RGB-ADC
G-ADC_A
B-ADC_A
R-ADC_A
G-ADC_B
B-ADC_B
R-ADC_B
A1.8V
A3.3V
6.2V
PLL3.3
PLL1.8
VideoMux3.3
ADC3.3
ADC1.8
MA3JT4700LSO
PROT

Q (4/7)

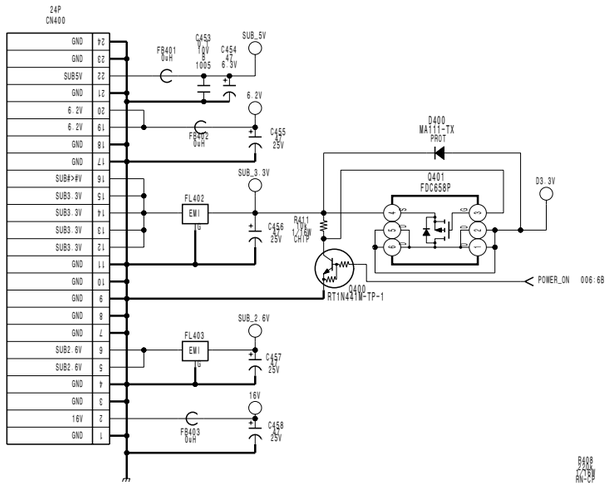
24P
CN400
D400
MA111-TX
PROT
Q401
FDC658P
Q400
RT1N441M-TP-1
POWER_ON 006:6B
D3.3V
SUB_5V
SUB_3.3V
SUB_2.6V
16V

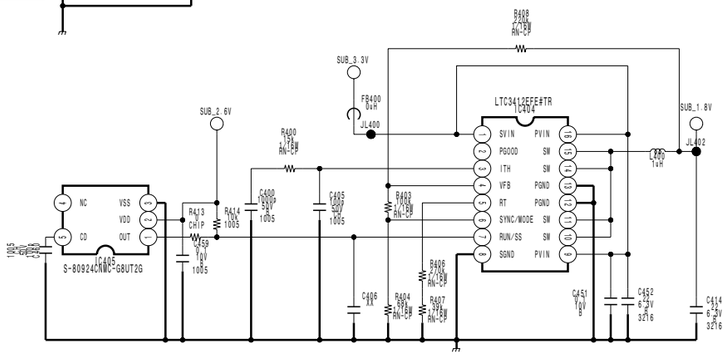
LTC3412EFE#TR
IC404
S-80924CNMC-G8UT2G
IC405
SUB_3.3V
SUB_2.6V
SUB_1.8V
JL400
JL402

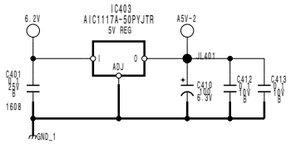
IC403
AIC1117A-50PYJTR
5V REG
A5V-2
JL401
GND_1

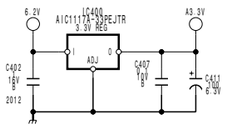
IC400
AIC1117A-33PEJTR
3.3V REG
A3.3V

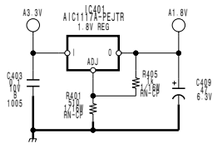
IC401
AIC1117A-PEJTR
1.8V REG
A1.8V

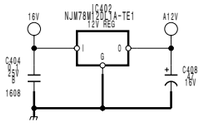
IC402
NJM78M12DL1A-TE1
12V REG
A12V

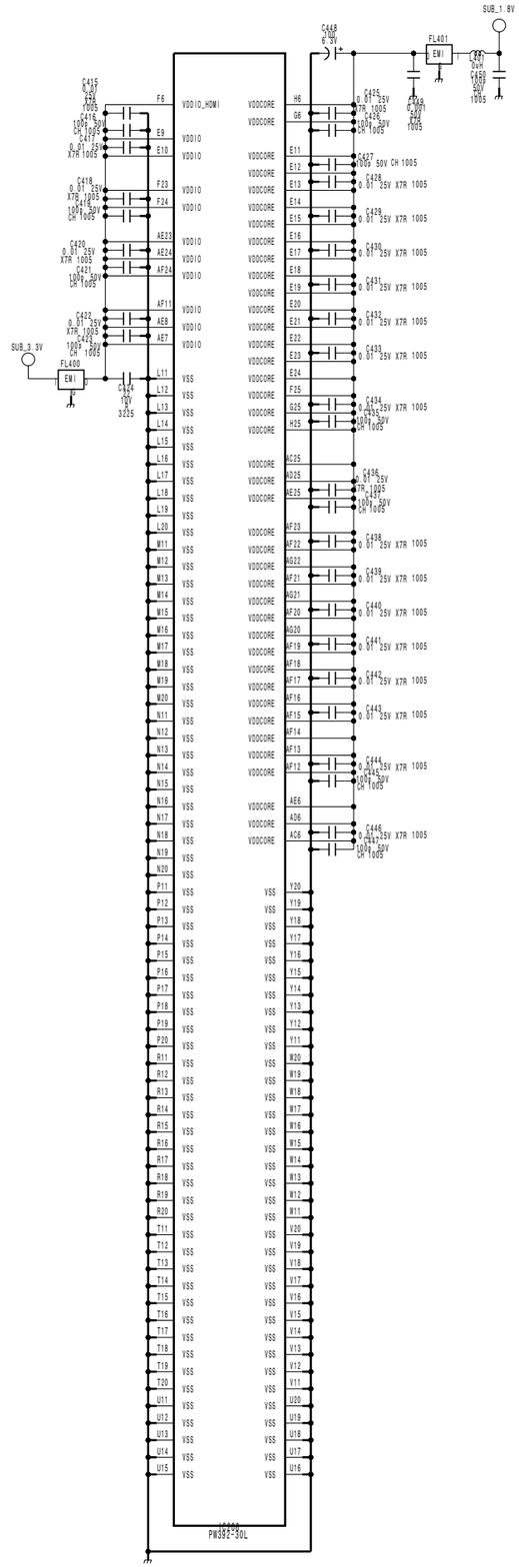
IC209
PW392-30L
FL400
FL401
SUB_3.3V
SUB_1.8V

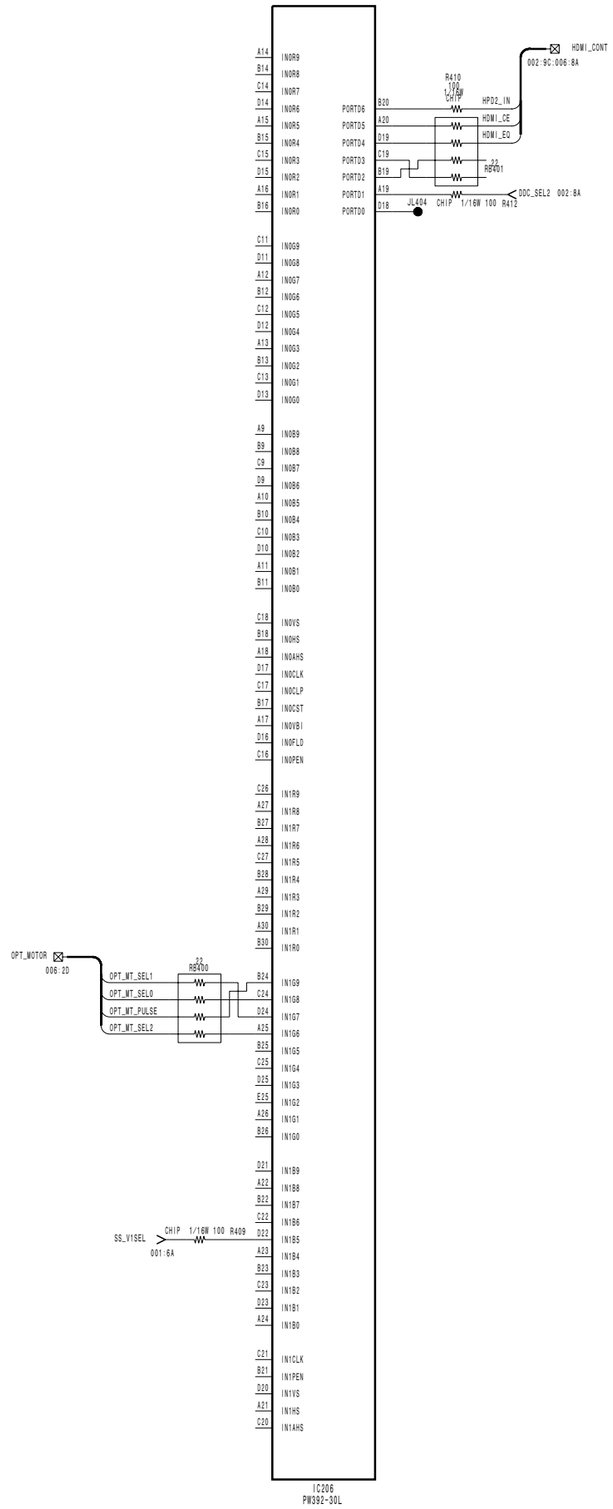
IC206
PW392-30L
HDMI_CONT
002:9C:006:8A
DDC_SEL2 002:8A
OPT_MOTOR
006:2D
SS_V1SEL
001:6A

6-6

Q (5/7)

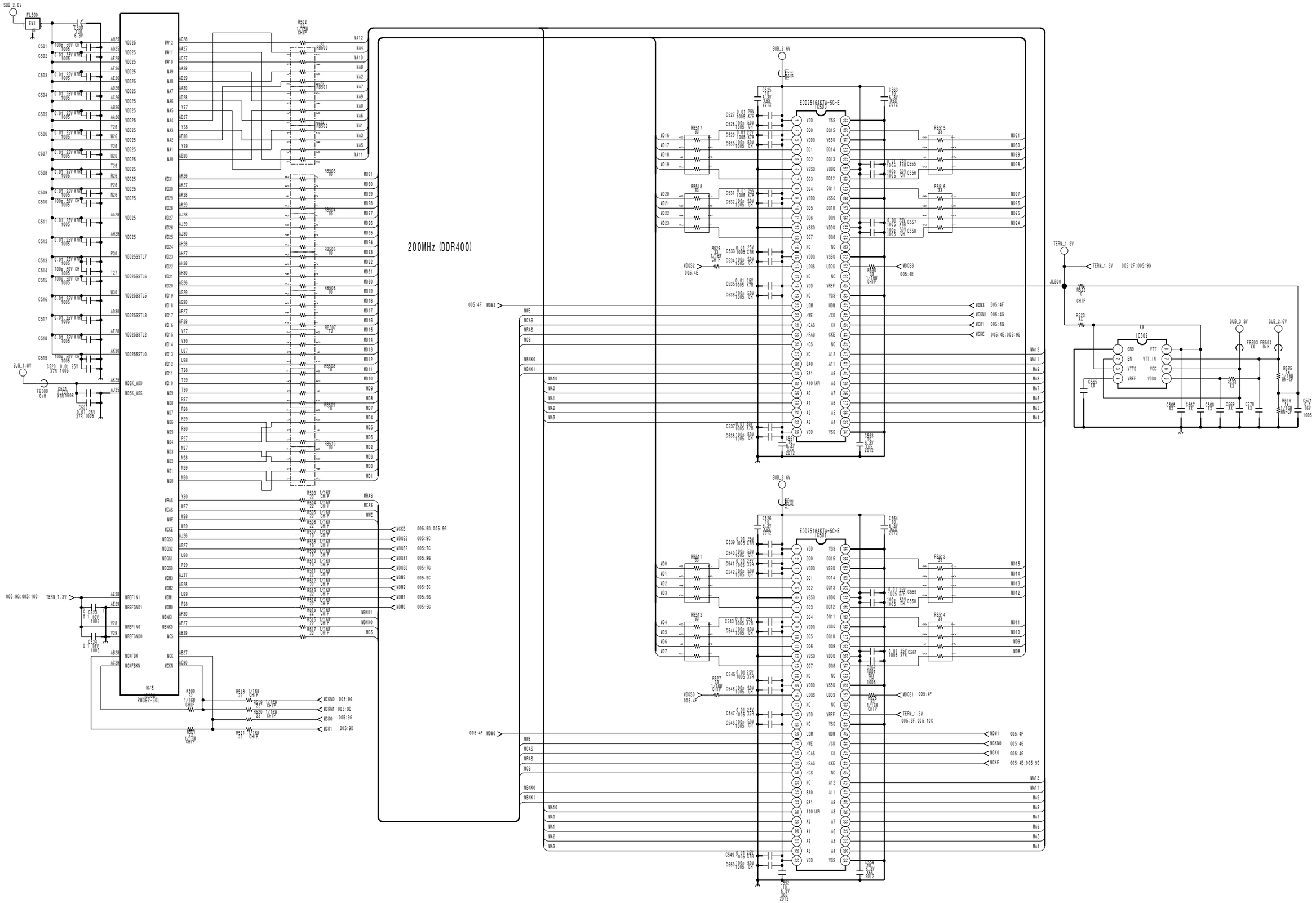
200MHz (DDR400)
IC500
PW592-30L
IC501
EDD2516AKTA-5C-E
IC502
SUB_2.6V
SUB_1.8V
SUB_3.3V
TERM_1.3V
JL500
FL500
EMI
FB500
0uH
FB503 FB504
0uH
MDQS2
005:4E
MDQS3
005:4E
005:4F MDM2
005:4F MDM0
005:9G:005:10C TERM_1.3V
MCKE 005:9D:005:9G
MDQS3 005:9C
MDQS2 005:7C
MDQS1 005:9G
MDQS0 005:7G
MDM3 005:9C
MDM2 005:5C
MDM1 005:9G
MDM0 005:5G
MCKN0 005:9G
MCKN1 005:9D
MCK0 005:9G
MCK1 005:9D
TERM_1.3V 005:2F:005:9G
MDM3 005:4F
MCKN1 005:4G
MCK1 005:4G
MCKE 005:4E:005:9G
MDQS1 005:4F
TERM_1.3V
005:2F:005:10C
MDM1 005:4F
MCKN0 005:4G
MCK0 005:4G
MCKE 005:4E:005:9D

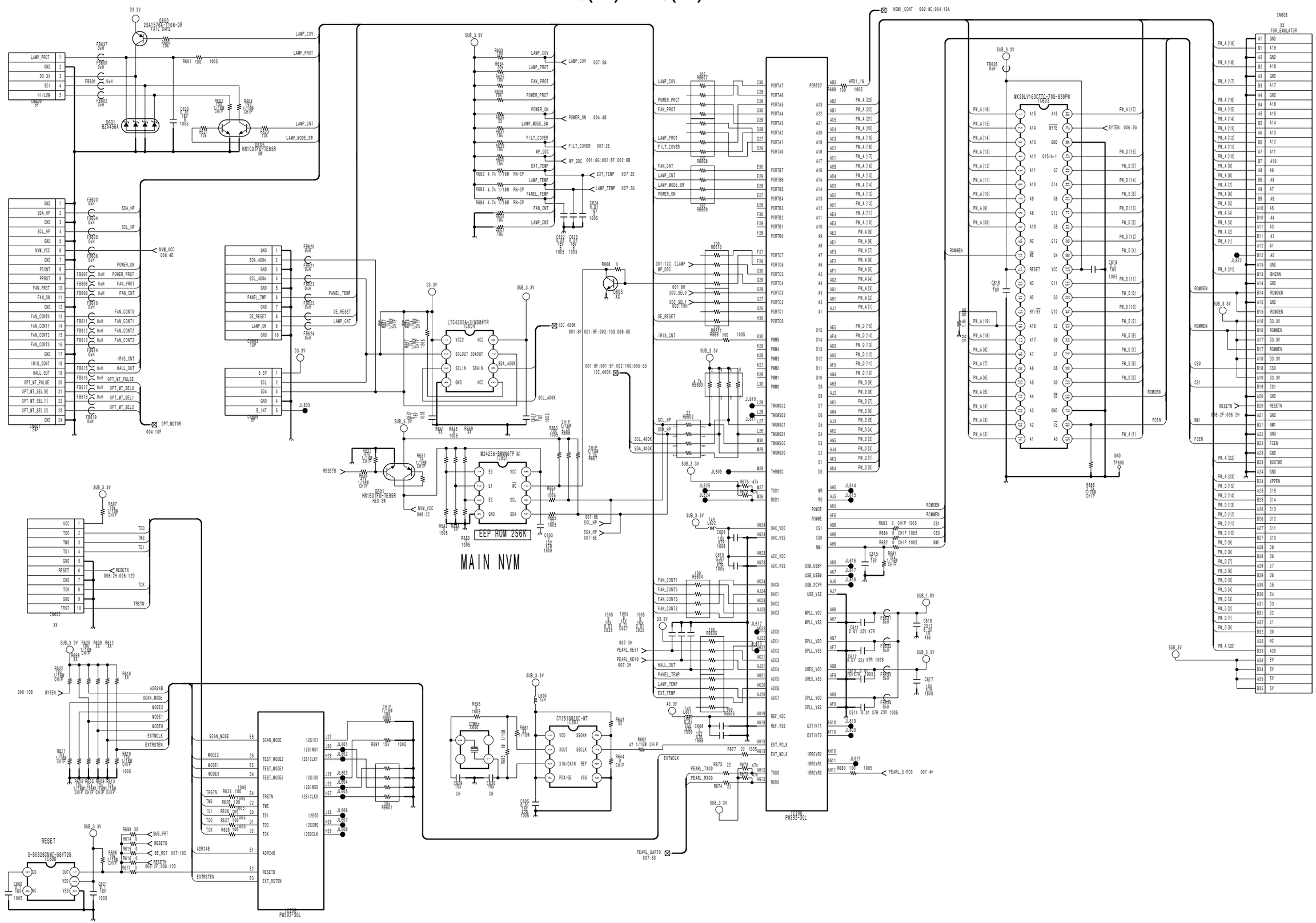
MAIN NVM
EEP ROM 256K
RESET
CN608
FOR_EMULATOR
MX29LV160CTTC-70G-839PW
LTC4300A-2IMS8#TR
M24256-BWMN6TP (A)
CY25100ZXC-WT
S-80828CNMC-G8YT2G
PW392-30L
HN1B01FU-TE85R
2SA1576C-TL06-QR
BZX585B

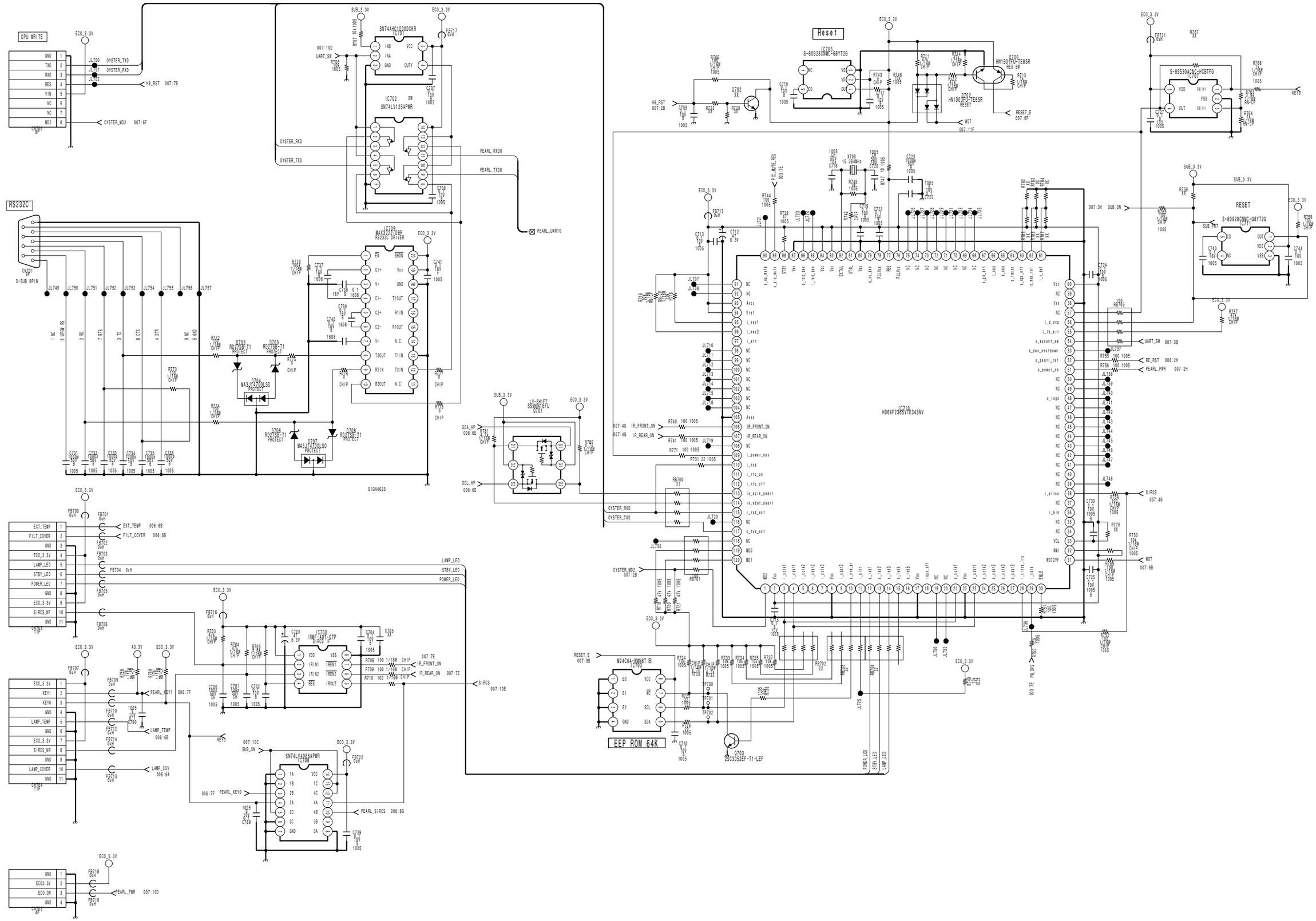
CPU WRITE
RS232C
Reset
IC701 SN74HC1G00DCKR
IC702 SN74LV125APWR
IC709 MAX3222TDBR RS232C DRIVER
IC705 S-80928CNMC-G8YT2G
IC704 HD64F2365VTE34SNV
IC706 SN74LVC4245APWR
IC708 SN74LVC4066APWR
IC707 SSM3K16FU
IC710 S-80928CNMC-G8YT2G
IC711 S-89530ACNC-HCBTFG
IC712 IRMF-8001-PTP
IC703 M24C64-WMN6T (B)
EEP ROM 64K
Q703 2SC3052EF-T1-LEF
Q702 XX
X700 16.384MHz
HN1B01FU-T6B5R RES.SW
HN1D01FU-T6B5R RESET
SIGN4625

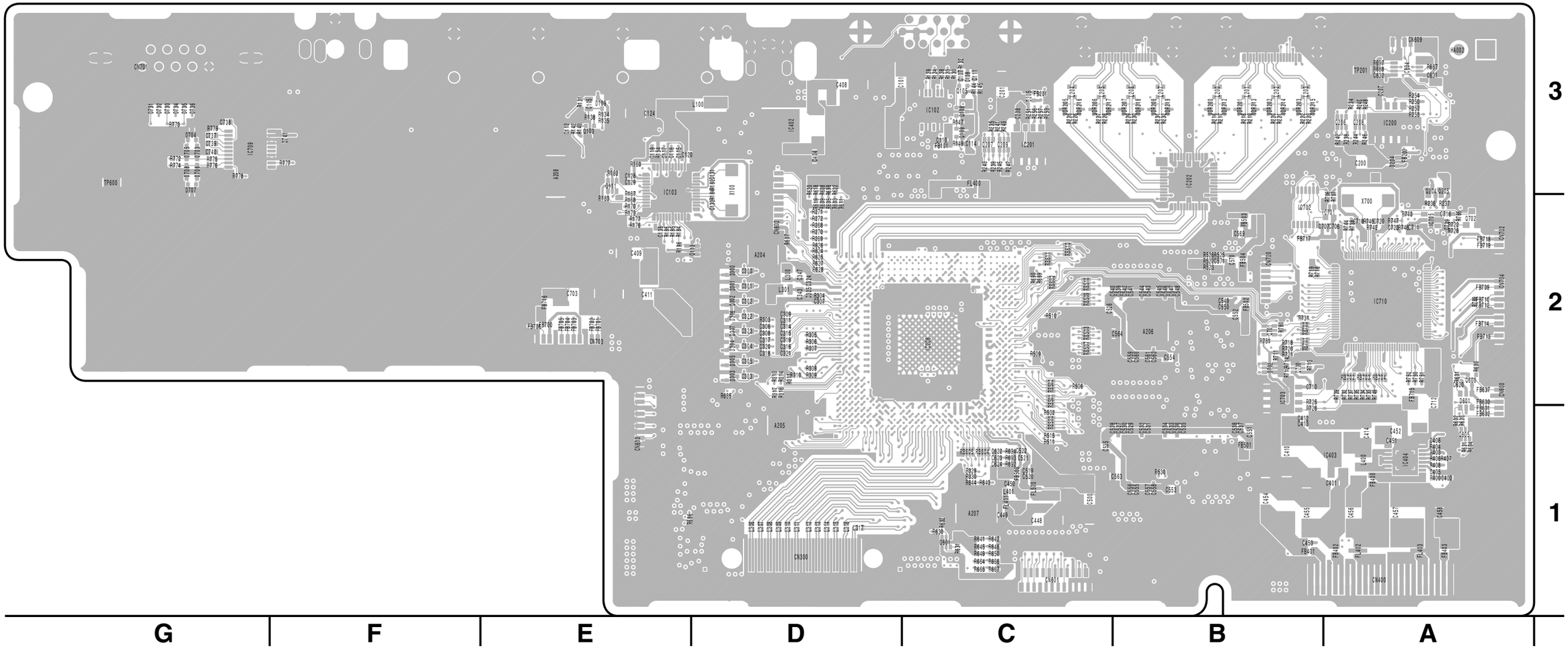

Q BOARD

*:B SIDE

D100	*D-3	D703	G-3	IC601	*C-1	Q200	*A-3	TP100	*G-2
D101	*D-3	D704	G-3	IC602	*C-1	Q201	*B-3	TP101	*E-2
D102	*E-3	D705	G-3	IC603	*D-1	Q202	*A-3	TP102	*E-2
D103	*C-3	D706	G-3	IC604	A-3	Q203	*B-3	TP200	*A-3
D104	*F-3	D707	G-3	IC700	*E-2	Q204	A-3	TP201	A-3
D105	*C-3	D708	G-3	IC701	A-2	Q205	A-3	TP600	G-3
D106	*C-3			IC702	B-2	Q206	A-3	TP700	*B-2
D107	*F-3	IC100	*D-3	IC703	B-2	Q207	C-3	TP701	*B-2
D108	*C-3	IC101	*D-3	IC705	A-2	Q208	A-3	TP702	*B-1
D109	E-3	IC102	C-3	IC707	*A-2	Q209	C-3		
D110	*D-3	IC103	E-3	IC708	*A-2	Q210	*A-3	VDR200	B-3
D111	*D-3	IC104	*E-2	IC709	G-3	Q211	*A-3	VDR201	B-2
D200	*A-3	IC200	A-3	IC710	A-2	Q212	*B-3	VDR202	B-2
D201	*B-3	IC201	C-3	IC711	*A-3	Q213	*A-3	VDR203	B-2
D202	*B-3	IC202	B-3			Q214	*C-3	VDR204	*B-3
D203	*B-3	IC203	*A-3	Q100	*C-3	Q215	*A-3	VDR205	C-3
D204	A-3	IC204	*C-3	Q101	*C-3	Q216	*A-3	VDR206	C-3
D205	C-3	IC205	*A-3	Q102	*C-3	Q400	*A-1	VDR207	B-3
D300	D-2	IC206	C-2	Q103	E-3	Q401	*A-1	VDR208	B-3
D301	D-2	IC400	*E-2	Q104	*D-3	Q600	A-2	VDR209	*B-3
D302	D-2	IC401	*E-2	Q105	C-3	Q601	C-1	VDR210	*B-3
D303	D-2	IC402	D-3	Q106	*C-3	Q603	*C-1	VDR211	*B-3
D304	D-2	IC403	A-1	Q107	*D-3	Q605	A-1	VDR212	B-3
D305	D-2	IC404	A-1	Q108	C-3	Q700	B-2	VDR213	B-3
D306	D-2	IC405	*A-1	Q109	C-3	Q701	B-2	VDR214	B-3
D307	D-2	IC500	*B-1	Q110	*D-2	Q702	A-2	VDR215	B-3
D400	*A-1	IC501	*B-2	Q111	E-3	Q703	*A-2	VDR216	C-3
D601	A-2	IC502	*B-2	Q112	*E-3			VDR217	C-3
D702	B-2	IC600	*D-2	Q113	D-2			VDR218	B-3
								VDR219	B-3

Q -A SIDE-

SUFFIX: -11

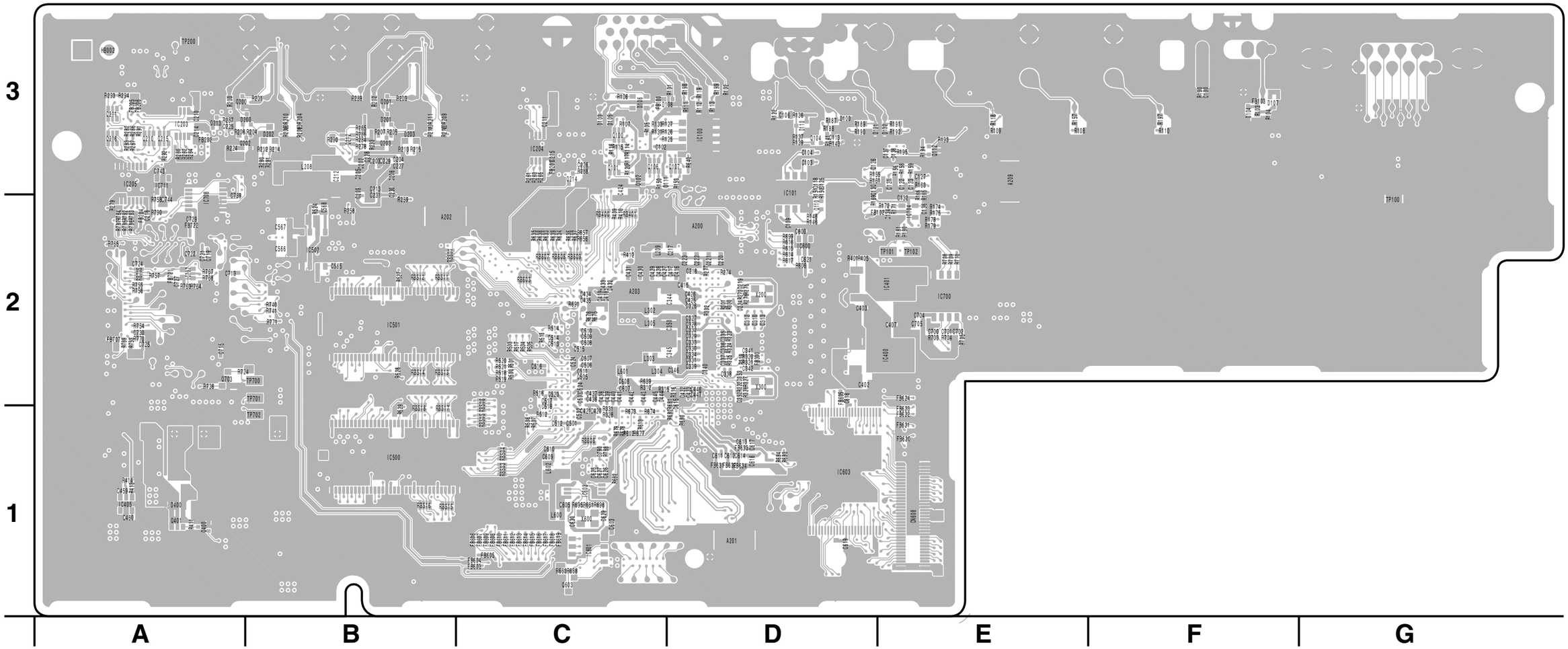

Q -B SIDE-
SUFFIX: -11

C BOARD

*:B SIDE

D700	E-2	TP100	D-4
D701	*E-5	TP101	D-4
D702	E-2	TP102	D-4
D800	D-2	TP103	D-4
D801	*D-3	TP104	E-5
D900	E-4	TP105	E-5
D901	E-4	TP106	F-5
		TP107	A-3
IC100	D-4	TP108	E-1
IC101	*E-4	TP109	A-1
IC102	*E-4	TP200	A-4
IC200	A-4	TP201	A-4
IC201	A-4	TP202	A-4
IC300	B-2	TP300	B-3
IC301	A-3	TP301	C-3
IC302	C-3	TP302	C-3
IC303	C-2	TP303	C-2
IC304	C-1	TP304	C-2
IC400	B-4	TP305	C-3
IC401	B-5	TP306	C-3
IC402	D-4	TP307	A-2
IC403	D-4	TP400	B-4
IC404	D-4	TP700	E-2
IC500	B-1	TP701	F-2
IC502	A-1	TP702	E-2
IC600	B-3	TP703	E-2
IC602	B-3	TP704	E-2
IC700	F-2	TP705	*E-3
IC701	F-2	TP800	D-3
IC702	*E-5	TP801	D-3
IC703	E-2	TP802	D-3
IC704	*E-2	TP803	D-2
IC705	E-3	TP804	D-3
IC706	*E-2	TP805	C-3
IC800	D-3	TP900	E-4
IC801	D-3	TP901	F-4
IC802	D-2	TP902	E-4
IC803	*C-3	TP903	E-3
IC804	C-3	TP904	E-4
IC805	*C-2	TP905	*A-3
IC806	D-2		
IC900	F-3		
IC901	F-4		
IC902	E-4		
IC903	*E-3		
IC904	E-4		
IC905	*E-3		
Q100	D-4		
Q101	D-4		
Q300	B-3		
Q400	B-4		
Q700	*E-2		
Q701	E-1		
Q702	*F-2		
Q703	E-2		
Q704	E-4		
Q705	*E-4		
Q706	E-2		
Q800	*D-3		
Q801	*C-3		
Q802	*D-3		
Q803	*C-3		
Q804	C-3		
Q900	*E-4		
Q901	E-3		
Q902	*F-4		
Q903	E-3		
Q904	E-3		

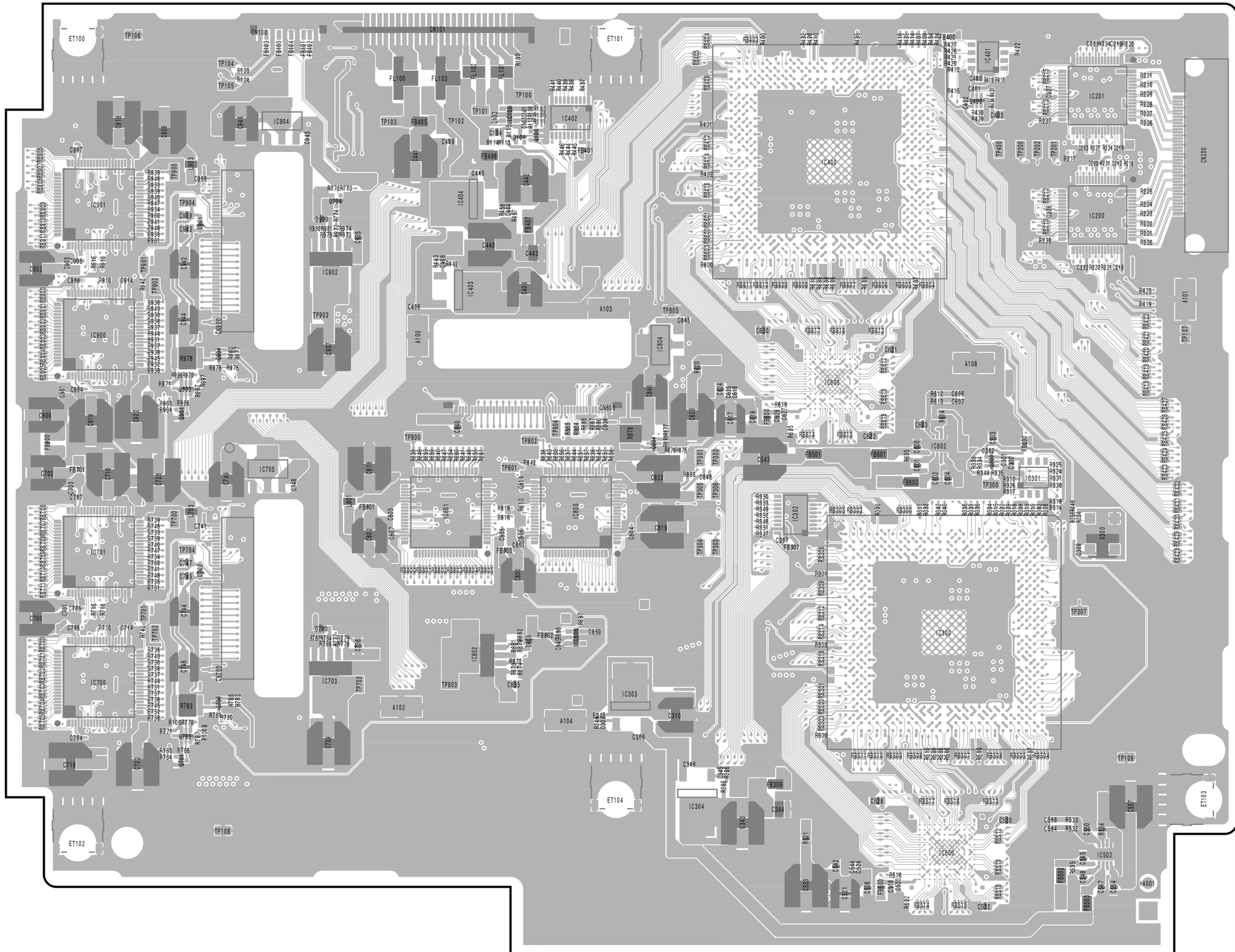

C -A SIDE-
SUFFIX: -11

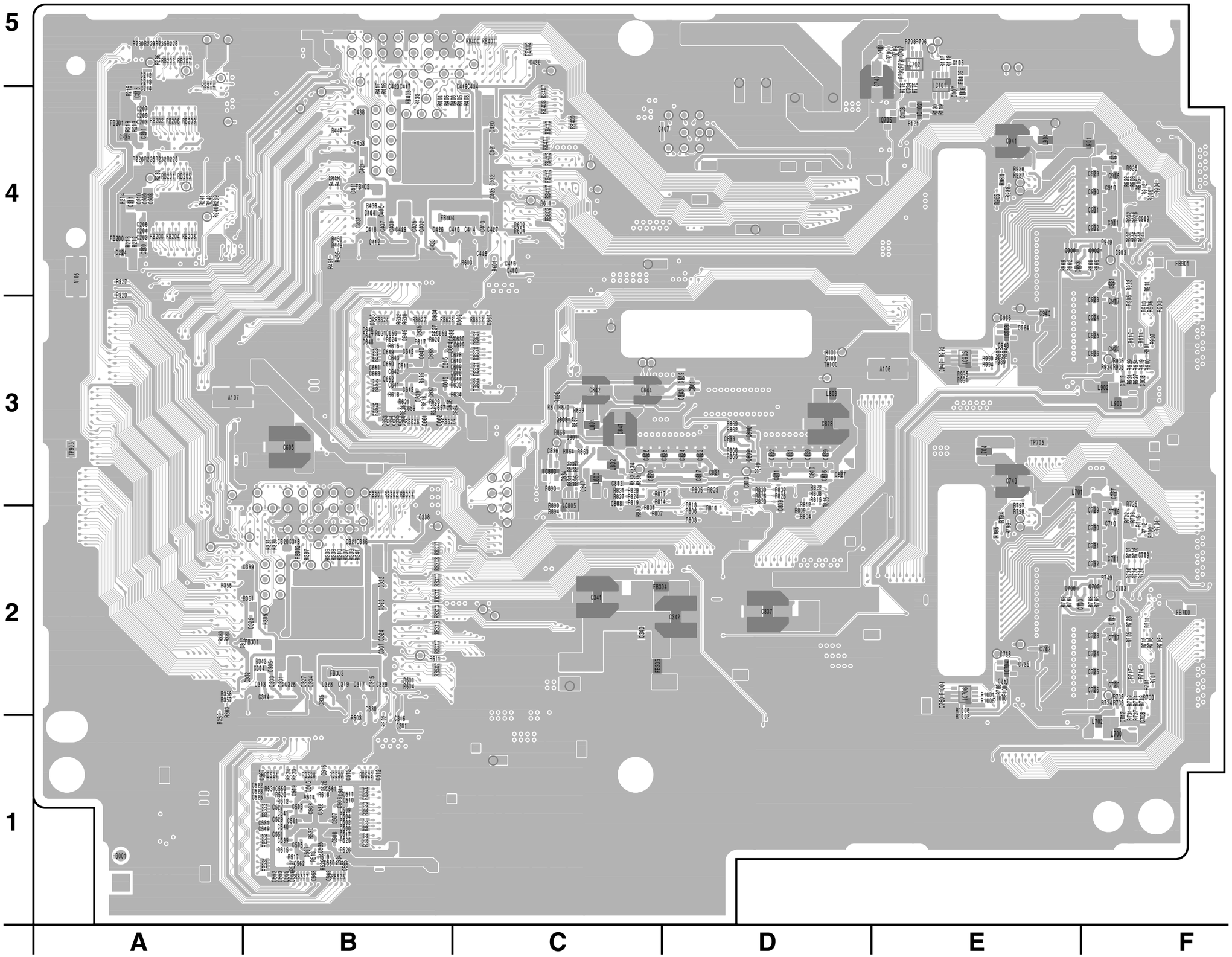

C -B SIDE-

SUFFIX: -11

6-13

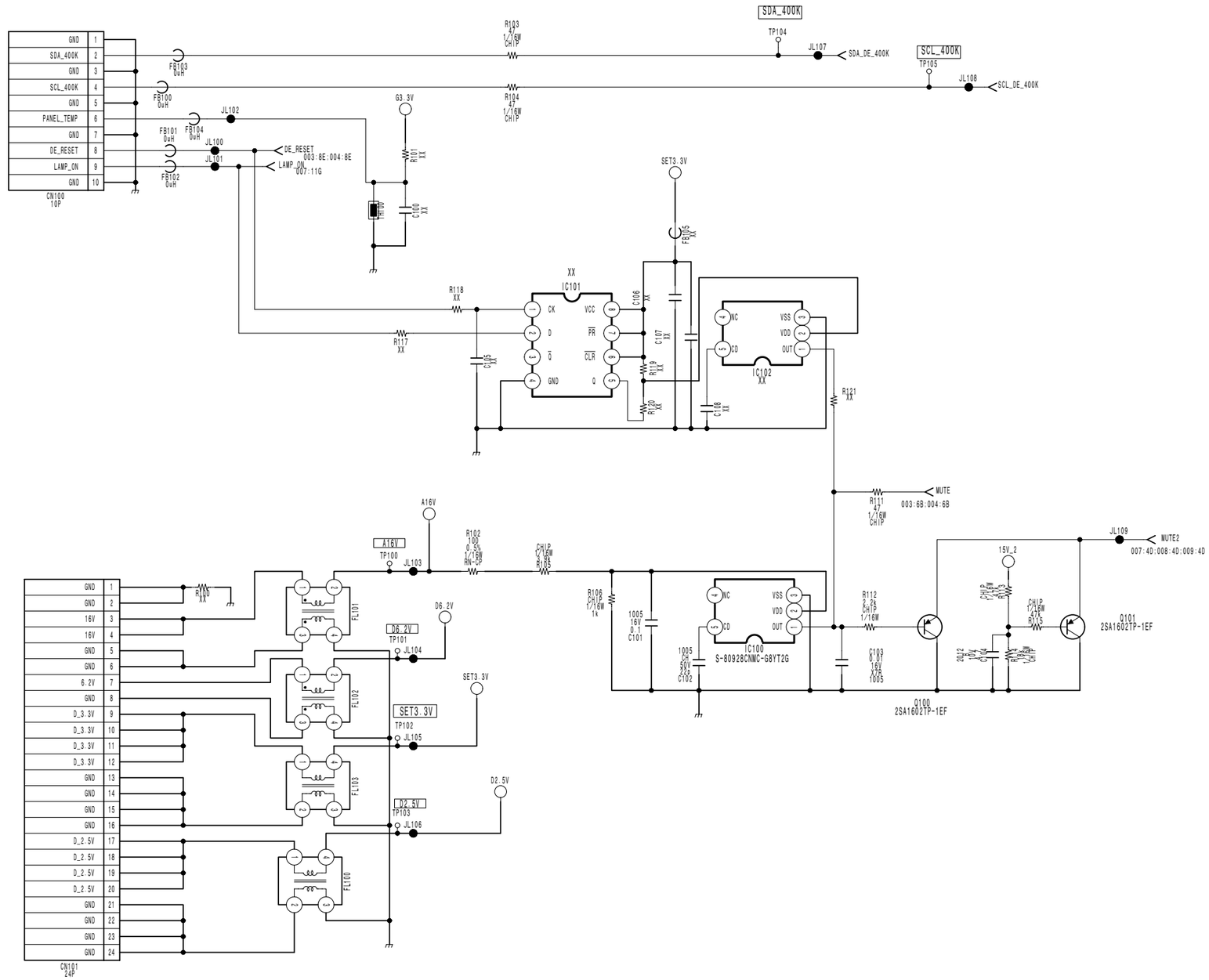

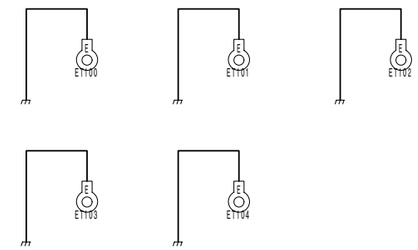

GND Contact

Mount Mecha	A100	169489521	XX	
Mount Mecha	A101	169489521	XX	
Mount Mecha	A102	169489521	XX	
Mount Mecha	A103	169489521	XX	
Mount Mecha	A104	169489521	XX	
Mount Mecha	A105	169489521		
Mount Mecha	A106	169489521	XX	
Mount Mecha	A107	169489521		
Mount Mecha	A108	169489521	XX	

GND TP106 GND TP107 GND TP108 GND TP109

 C (2/9)

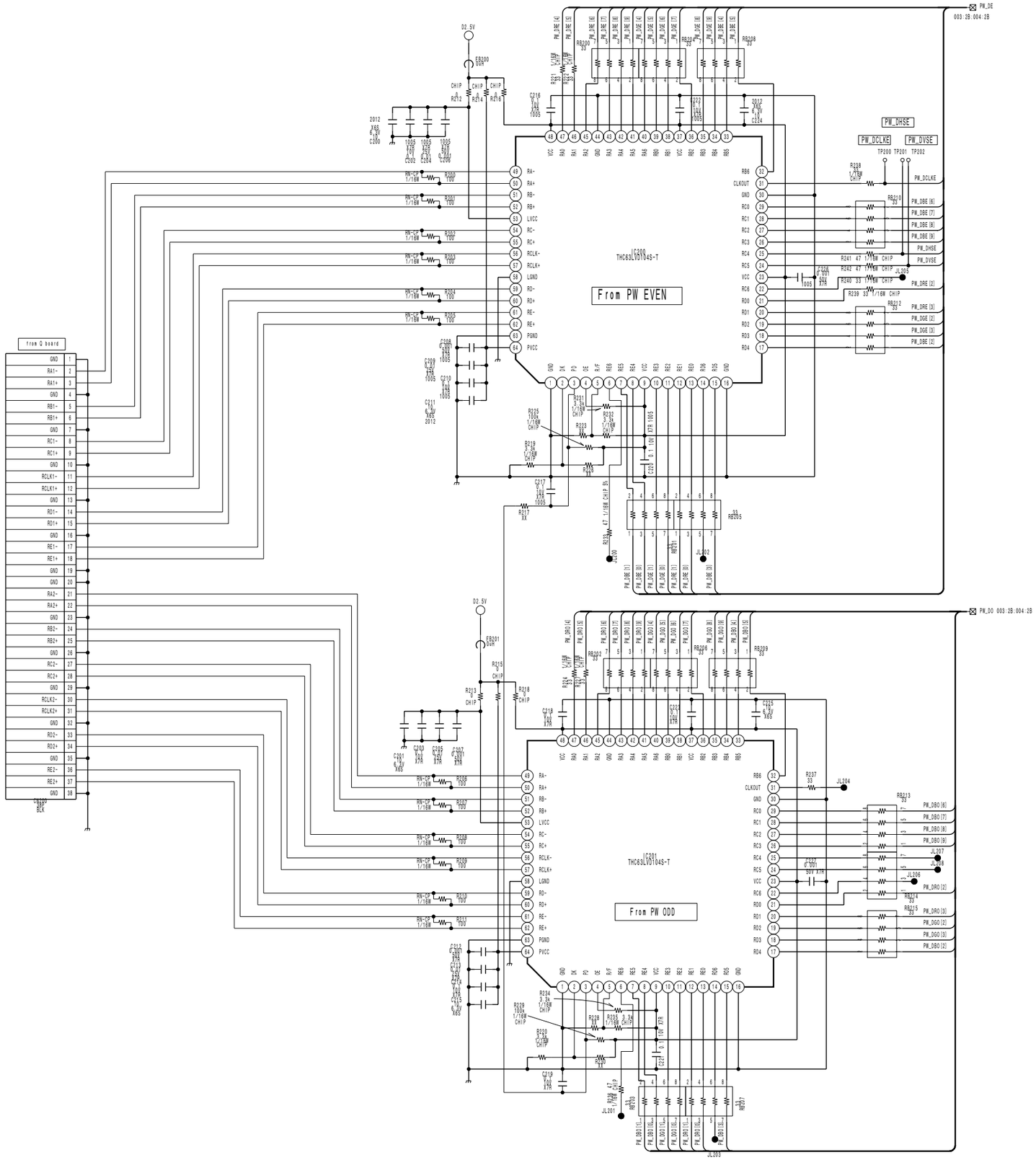
From PW EVEN
From PW ODD
IC200
IC201
THC63LVD104S-T
from Q board
PW_DHSE
PW_DVSE
PW_DCLKE
PW_DE
PW_DO

 6-15

C (3/9)

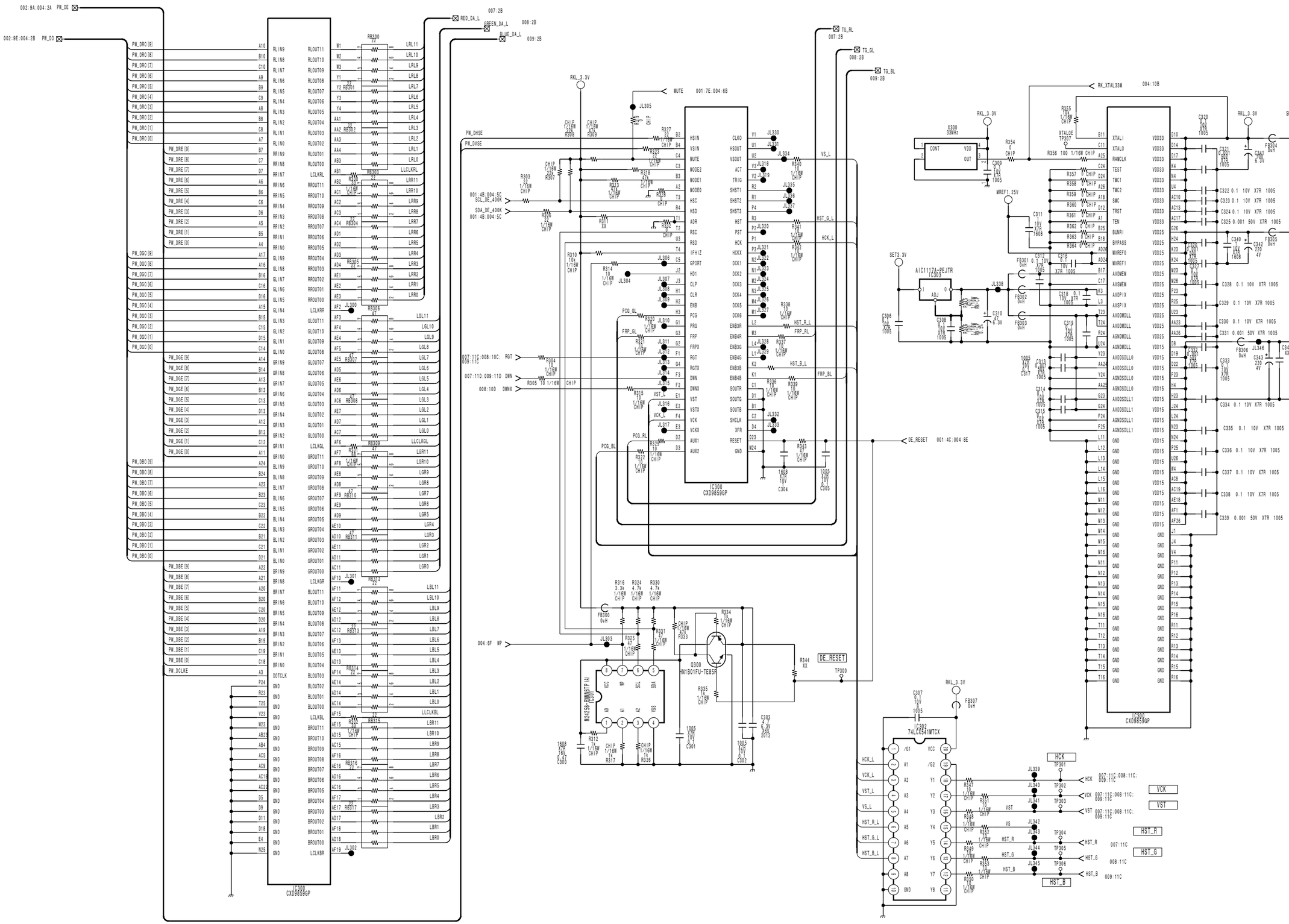
IC300
CXD9859GP
Q300
HN1B01FU-TE85R
IC302
74LCX541MTCX
AIC1117A-PEJTR
X300
33MHz
HCK
VCK
VST
HST_R
HST_G
HST_B
DE_RESET
MUTE
RED_DA_L
GREEN_DA_L
BLUE_DA_L
TG_RL
TG_GL
TG_BL
RK_XTAL33W
SET3.3V
RKL_3.3V
D2.5V

6-16

C (4/9)

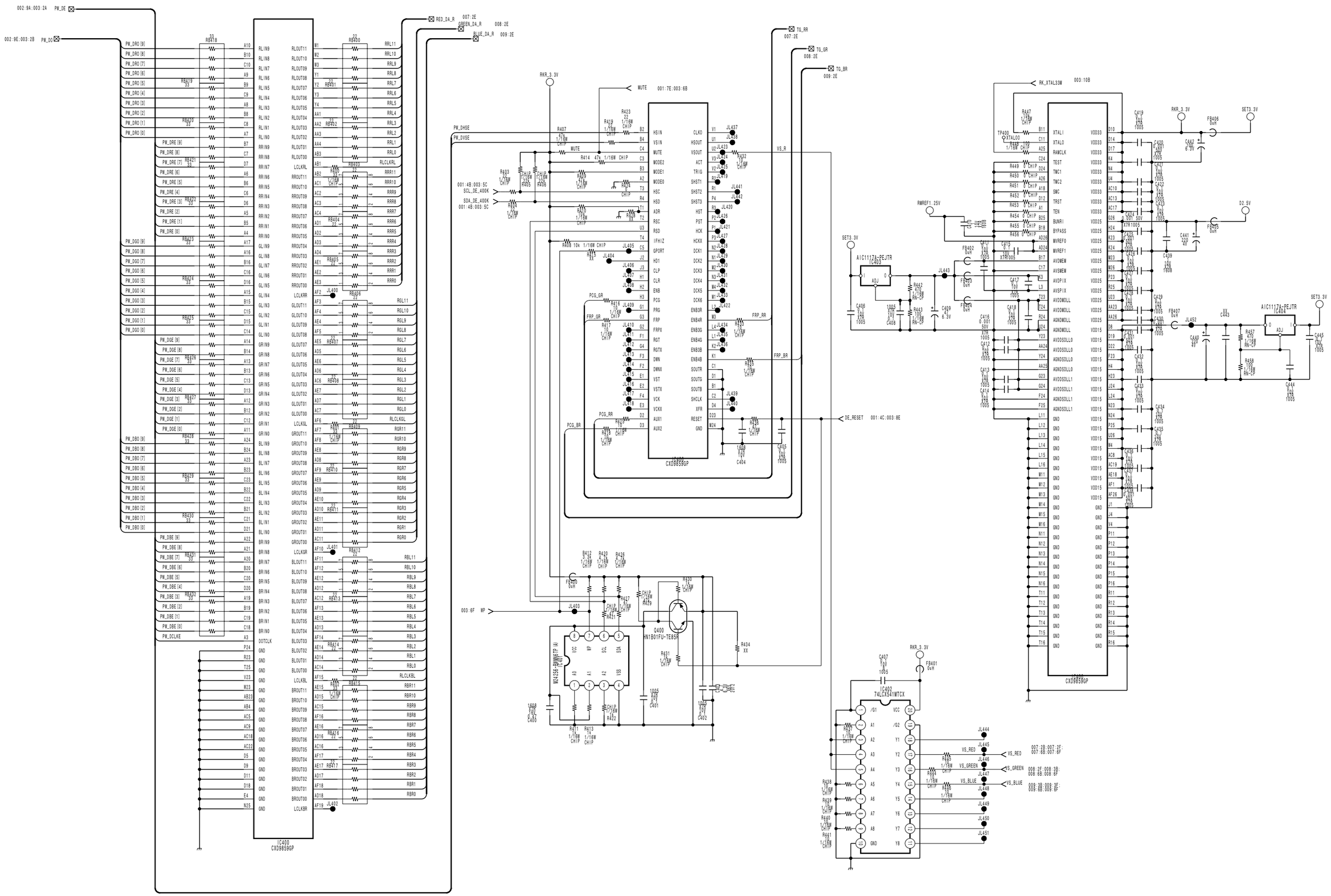
IC400
CXD9859GP
IC402
74LCX541MTCX
AIC1117A-PEJTR
Q400
HN1B01FU-TE85R
RED_DA_R
GREEN_DA_R
BLUE_DA_R
TG_RR
TG_GR
TG_BR
DE_RESET
VS_RED
VS_GREEN
VS_BLUE
RKR_3.3V
SET3.3V
D2.5V
RK_XTAL33M

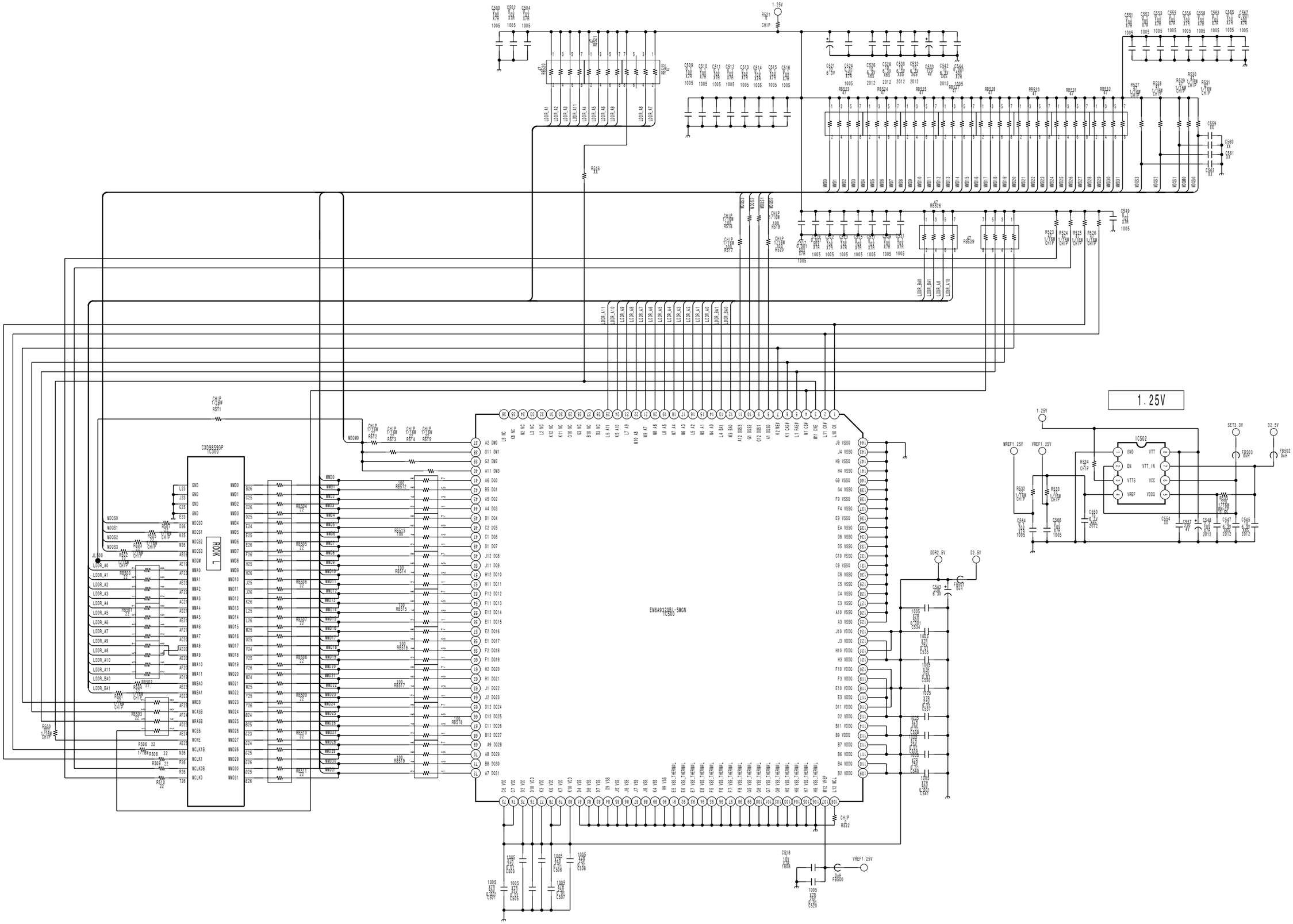
1.25V
CXD8859GP
IC300
ROOK L
EM6A9320BL-5MGN
IC502
VTT
VTT_IN
VCC
VDDQ
GND
EN
VTTS
VREF
SET3.3V
D2.5V
DDR2.5V
D3.5V
VREF1.25V
WREF1.25V

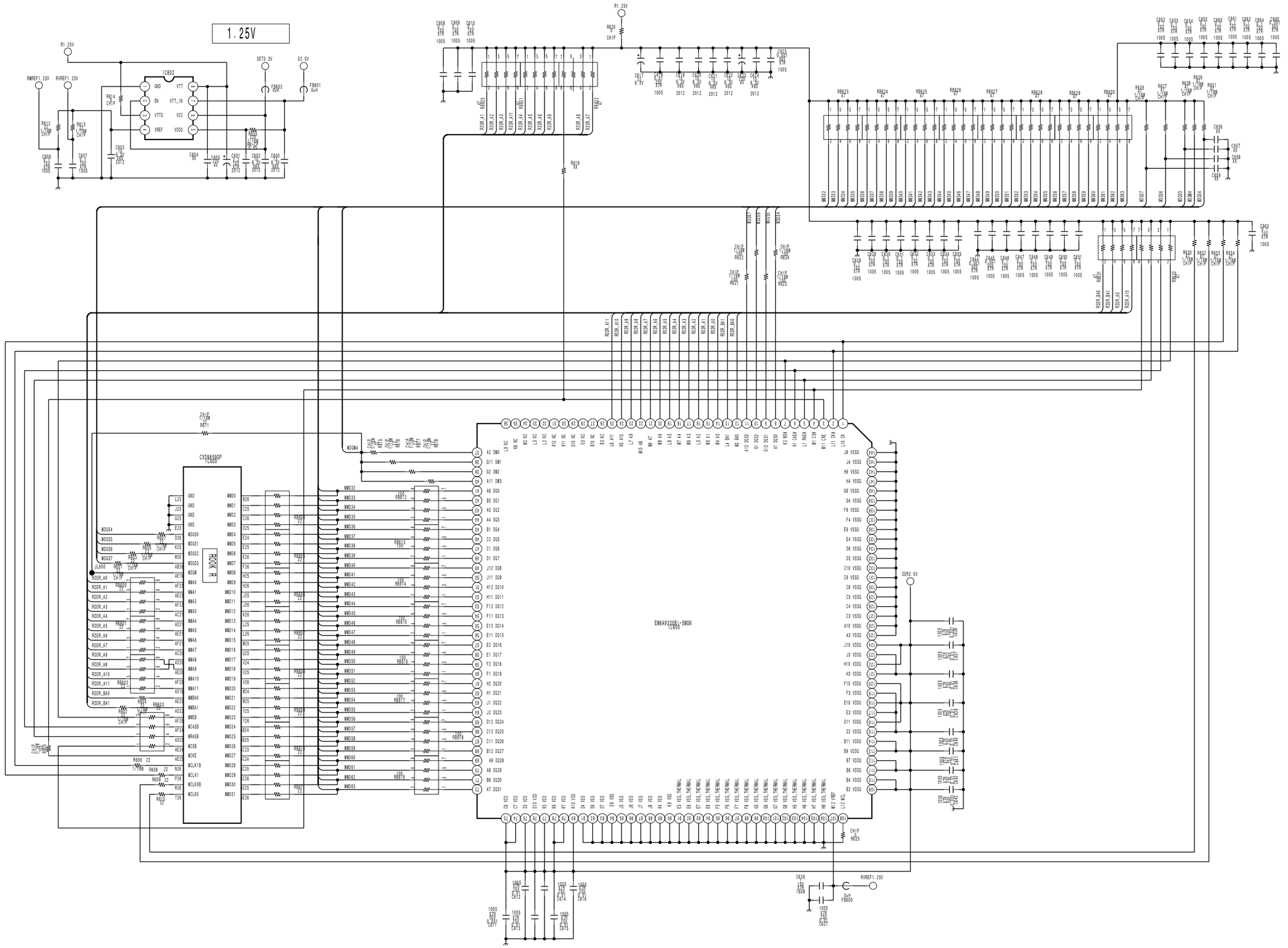
1.25V
R1.25V
RVREF1.25V
RVREF1.25V
IC602
GND
VTT
EN
VTT_IN
VTTS
VCC
VREF
VDDQ
SET3.3V
D2.5V
FB601
FB602
CXD9859GP
IC400
ROOK R
EM6A9330BL-5MGN
IC800
DDR2.5V
RVREF1.25V
FB600

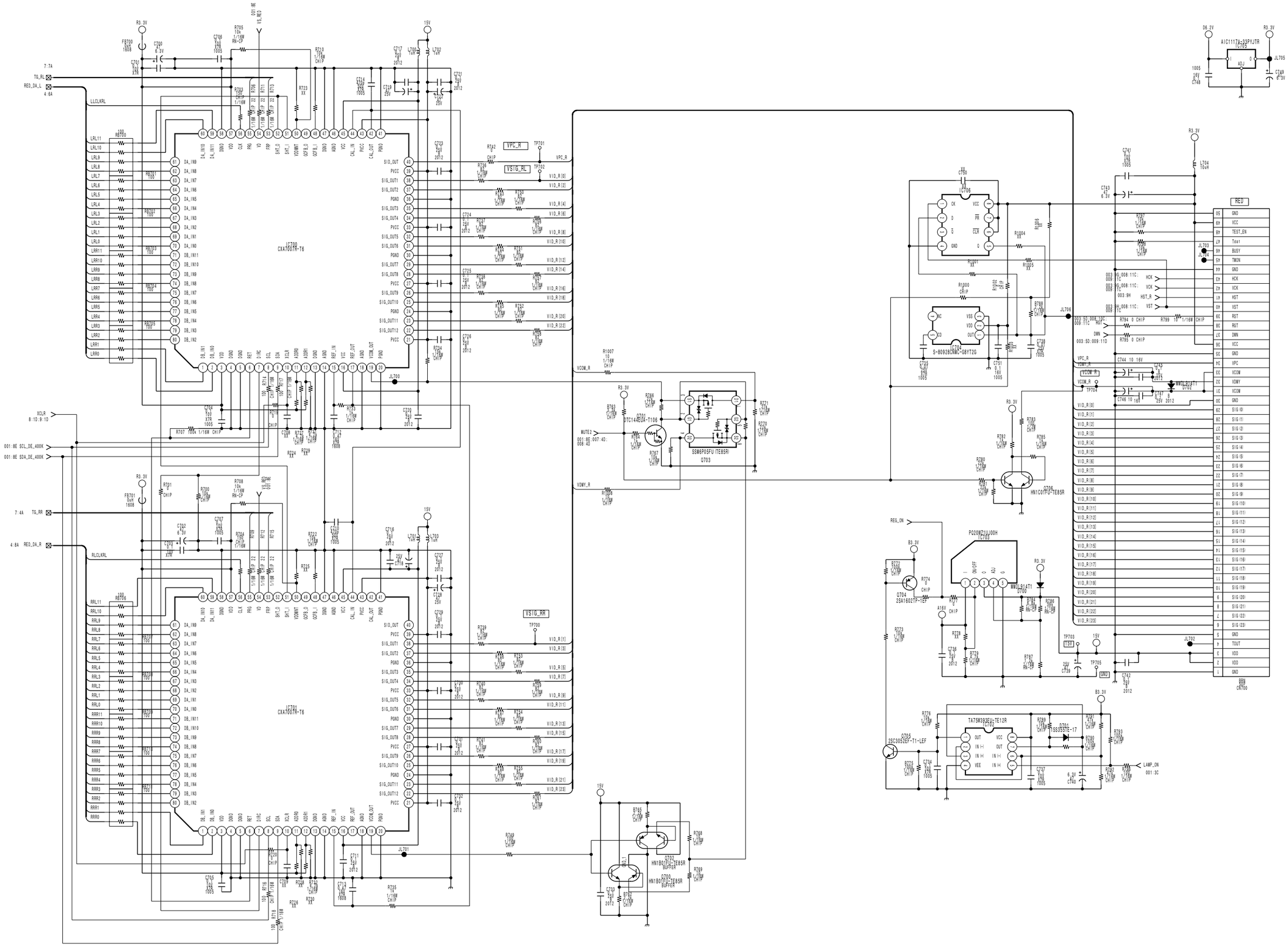
IC700
CXA7009R-T6
IC701
CXA7009R-T6
IC706
S-80928CNNC-G8YT2G
IC704
AIC1117A-33PXJTR
IC703
P020NZ1UJ00H
Q703
SSM6P05FU(TE85R)
Q706
HN1C01FU-TE85R
Q702
HN1B01FU-TE85R
BUFFER
Q700
HN1B01FU-TE85R
BUFFER
Q704
2SA1602TP-1EF
Q705
2SC3052EF-T1-LEF
Q701
DTC144EUA-T106
TA75W393FU-TE12R
IC705
RED
CN700
VPC_R
VSTG_RL
VSTG_RR
VCOM_R
VDWY_R
REG_ON
LAMP_ON
XCLR
TG_RL
TG_RR
RED_DA_L
RED_DA_R
LLCLKRL
RLCLKRL
MUTE2
HCK
VCK
HST
VST
RST
DWN
TOUT
GND
15V
R3.3V
B3.3V
D6.2V
A16V

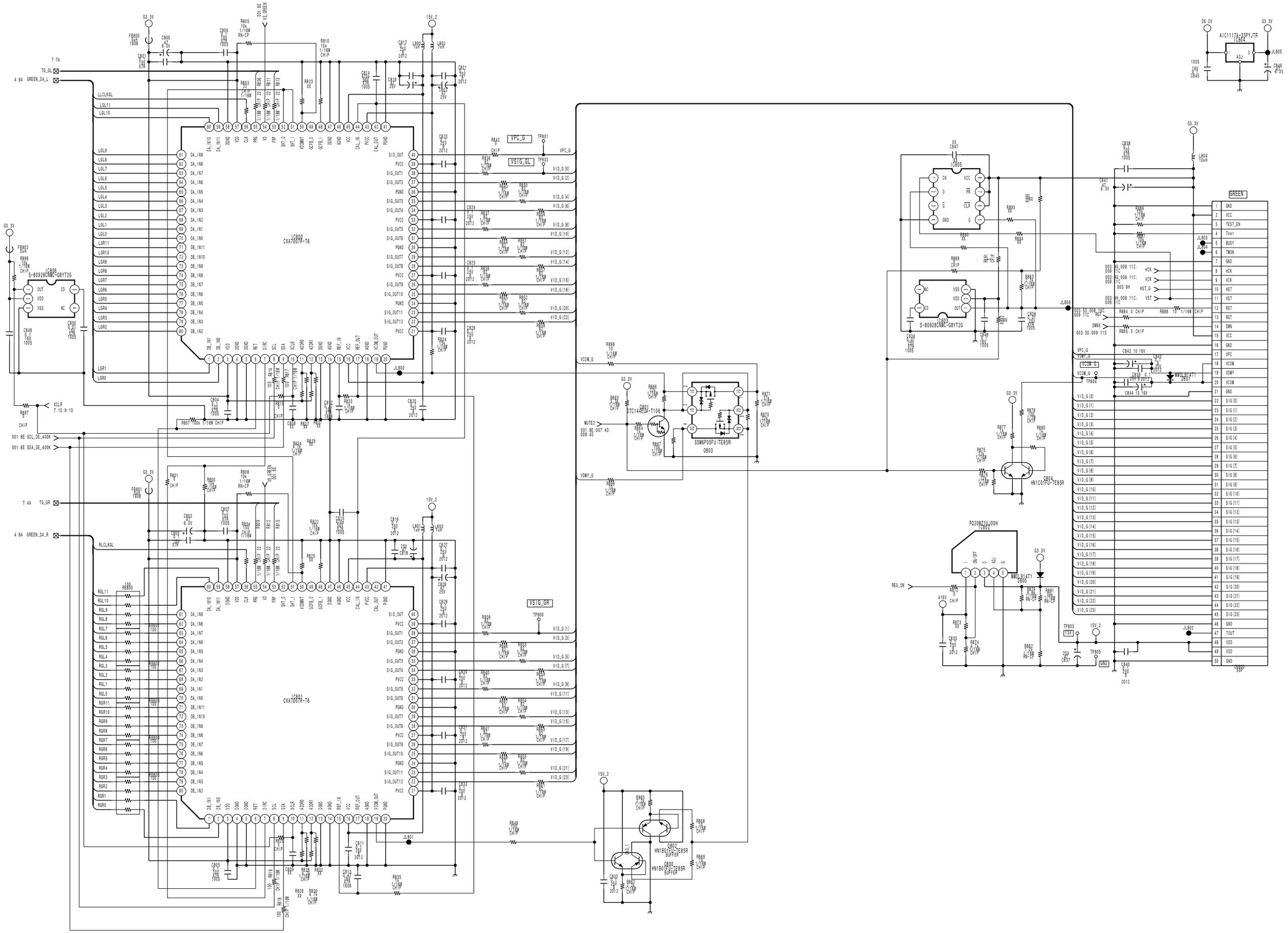
IC800
CXA7007R-T6
IC801
CXA7007R-T6
IC805
S-80928CNMC-G8YT2G
IC806
S-80928CNMC-G8YT2G
IC804
AIC1117A-33PYJTR
IC802
PQ20WZ1UJ00H
Q801
DTC144EUA-T106
SSM6P05FU(TE85R)
Q803
Q804
HN1C01FU-TE85R
Q802
HN1B01FU-TE85R
BUFFER
Q800
HN1B01FU-TE85R
BUFFER
GREEN
JL800
JL801
JL802
JL803
JL804
JL805
JL806
VSTG_GL
VSTG_GR
VPC_G
VCOM_G
VDWY_G
REG_ON
G3_3V
15V_2
D6.2V
GND
VCC
TEST_EN
Test
BUSY
TMON
HCK
VCK
HST
VST
RST
RGT
DWN
VPC
VCOM
VDWY
S1G[0]
S1G[1]
S1G[2]
S1G[3]
S1G[4]
S1G[5]
S1G[6]
S1G[7]
S1G[8]
S1G[9]
S1G[10]
S1G[11]
S1G[12]
S1G[13]
S1G[14]
S1G[15]
S1G[16]
S1G[17]
S1G[18]
S1G[19]
S1G[20]
S1G[21]
S1G[22]
S1G[23]
TOUT
VDD
50P

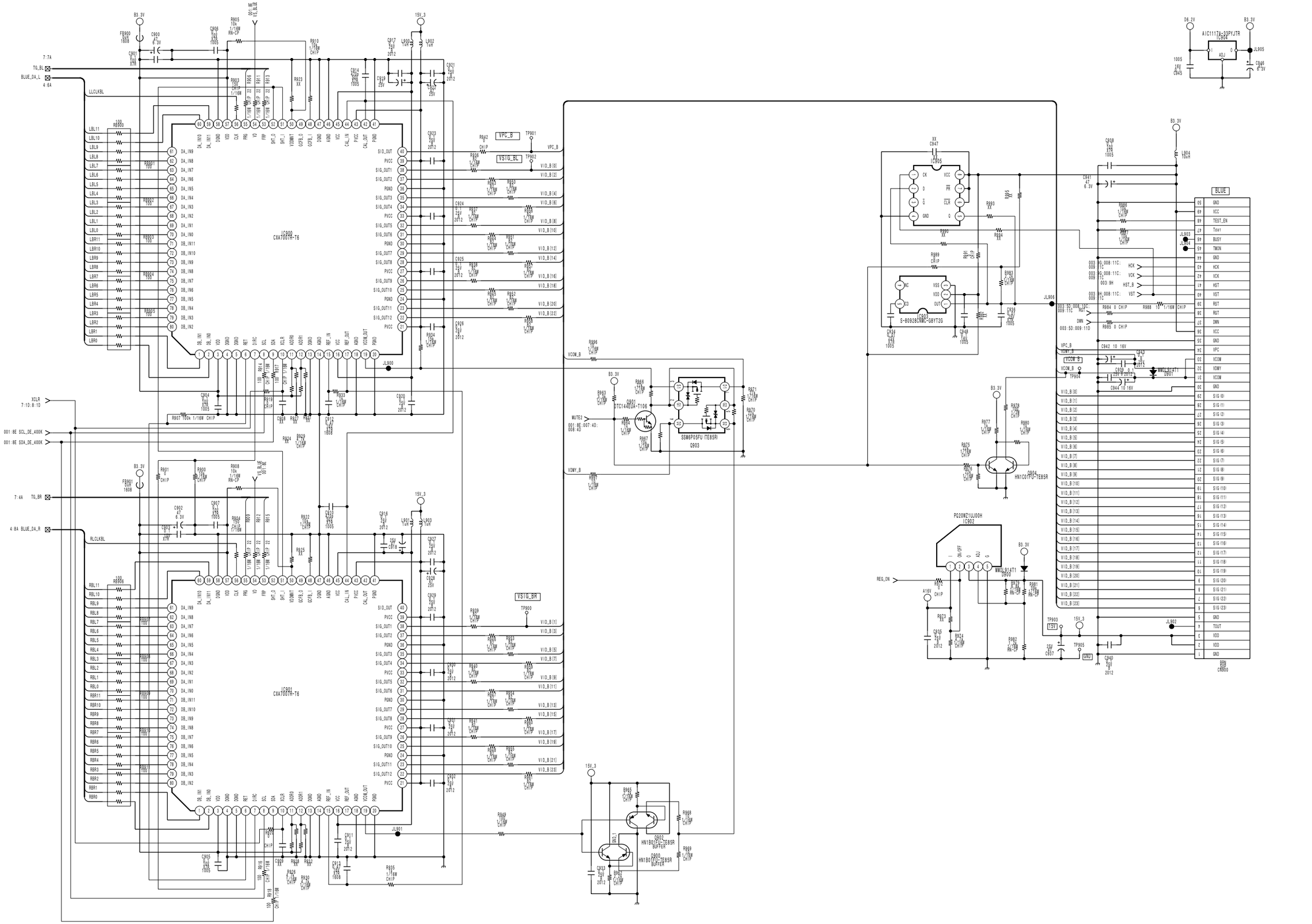
IC900
CXA7007R-T6
IC901
CXA7007R-T6
IC905
S-80928CNNC-G8YT2G
IC902
PQ20WZ1UJ00H
A1C1117A-33PVJTR
IC904
Q901
DTC144EUA-T106
SSM6P05FU (TE85R)
Q903
Q904
HN1C01FU-TE85R
Q902
HN1B01FU-TE85R
BUFFER
Q900
HN1B01FU-TE85R
BUFFER
BLUE
VSTG_BL
VSTG_BR
VPC_B
VCOM_B
VDWY_B
MUTE2
REG_ON
JL900
JL901
JL902
JL903
JL904
JL905
JL906
B3_3V
15V_3
D6.2V
GND

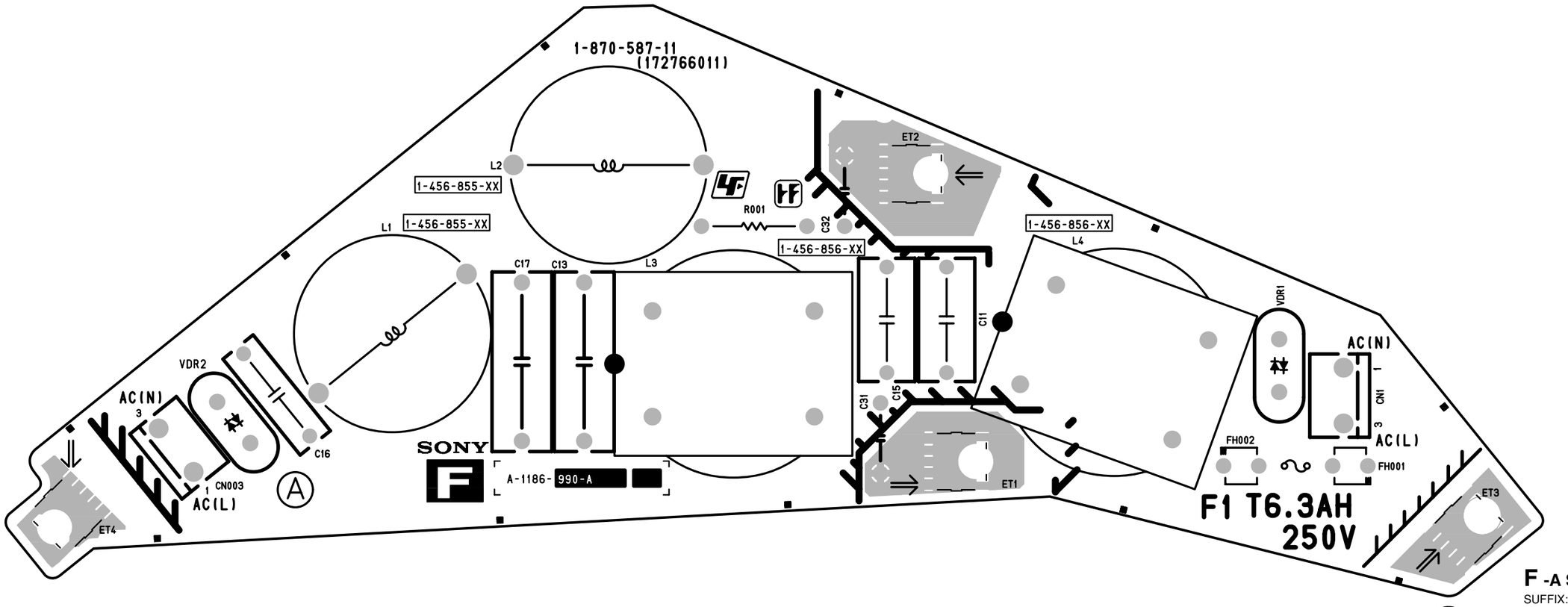

F -A SIDE-
SUFFIX: -11

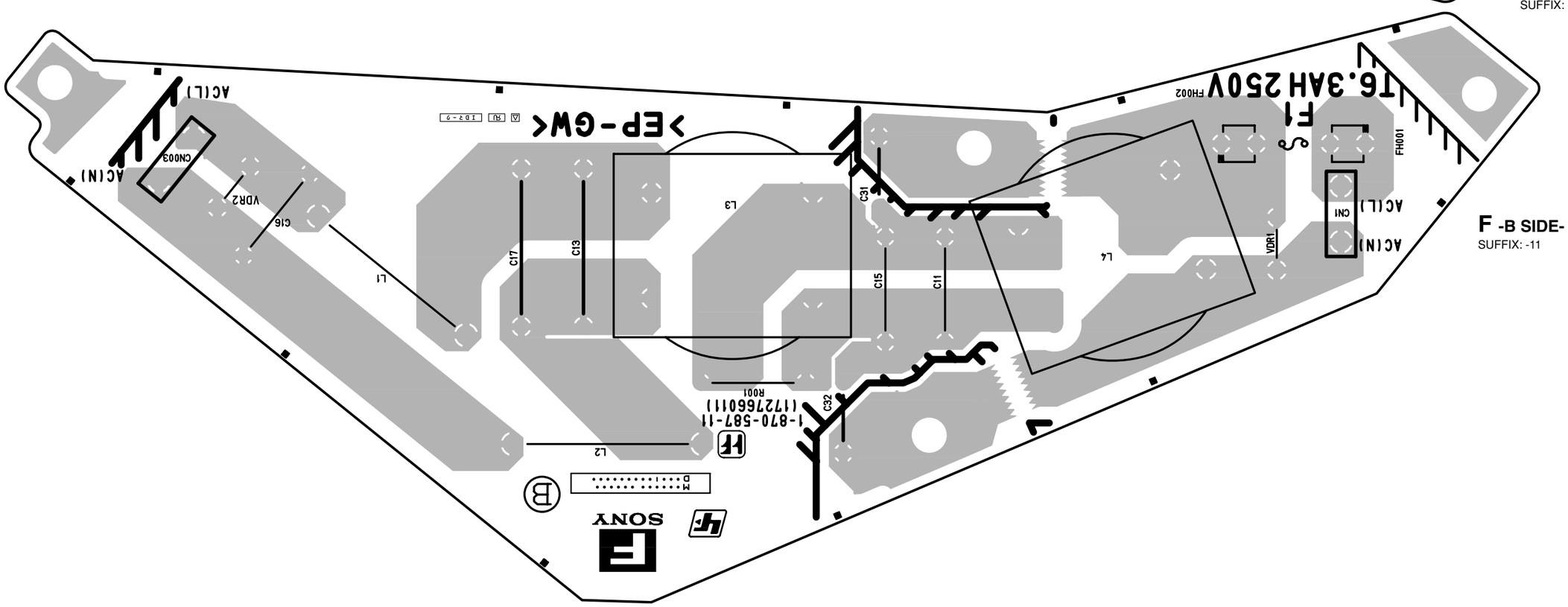

F -B SIDE-
SUFFIX: -11

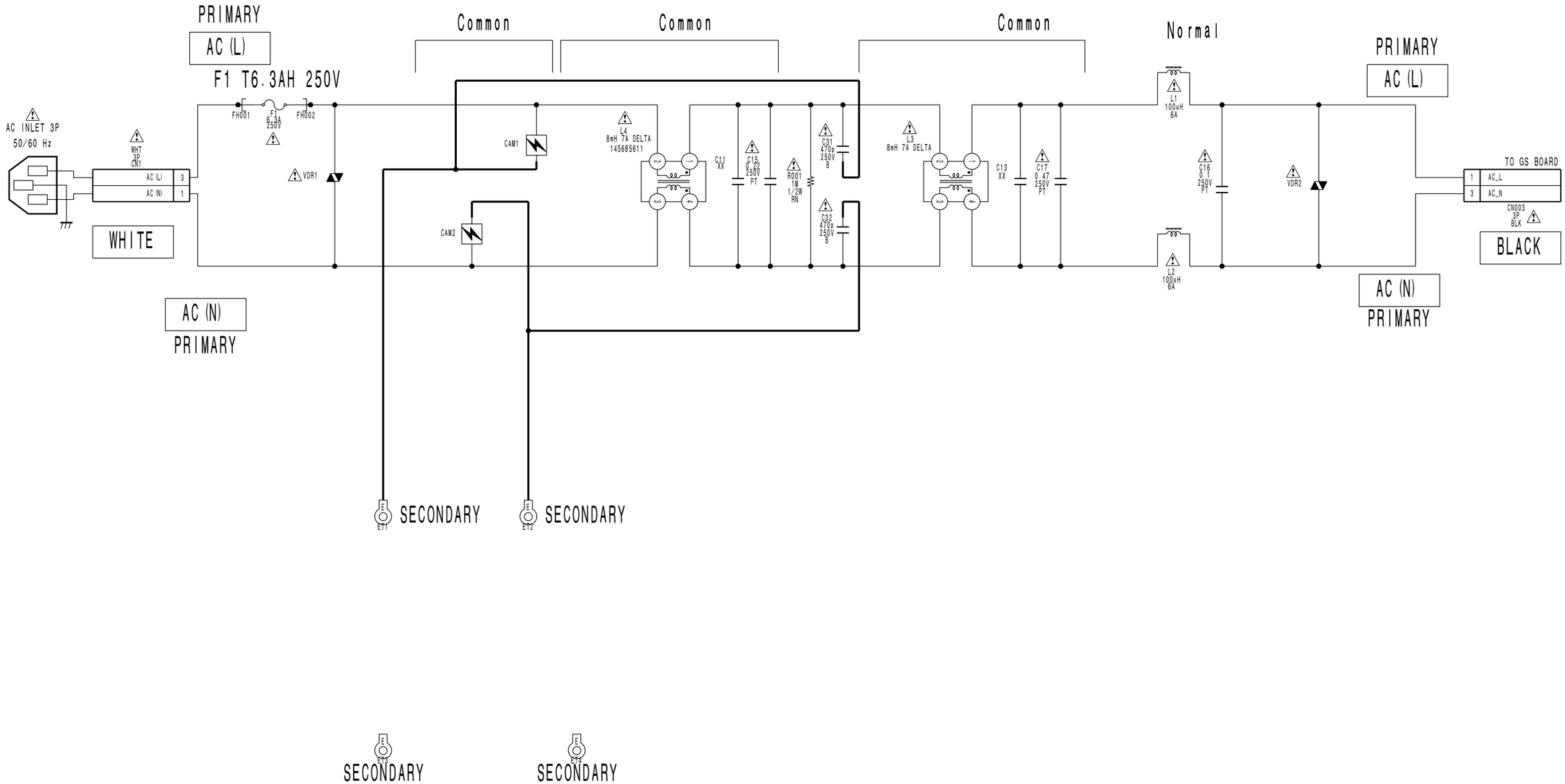
PRIMARY
AC (L)
F1 T6.3AH 250V
Common
Common
Common
Normal
PRIMARY
AC (L)
AC INLET 3P
50/60 Hz
WHT
3P
CN1
AC (L)
AC (N)
WHITE
FH001
F1
6.3A
250V
FH002
VDR1
CAM1
CAM2
L4
8mH 7A DELTA
145685611
C14
XX
C15
0.22
250V
PT
R001
1M
1/2W
RN
C31
470p
250V
B
C32
470p
250V
B
L3
8mH 7A DELTA
C13
XX
C17
0.47
250V
PT
L1
100uH
6A
L2
100uH
6A
C16
0.1
250V
PT
VDR2
TO GS BOARD
AC_L
AC_N
CN003
3P
BLK
BLACK
AC (N)
PRIMARY
AC (N)
PRIMARY
SECONDARY
SECONDARY
SECONDARY
SECONDARY

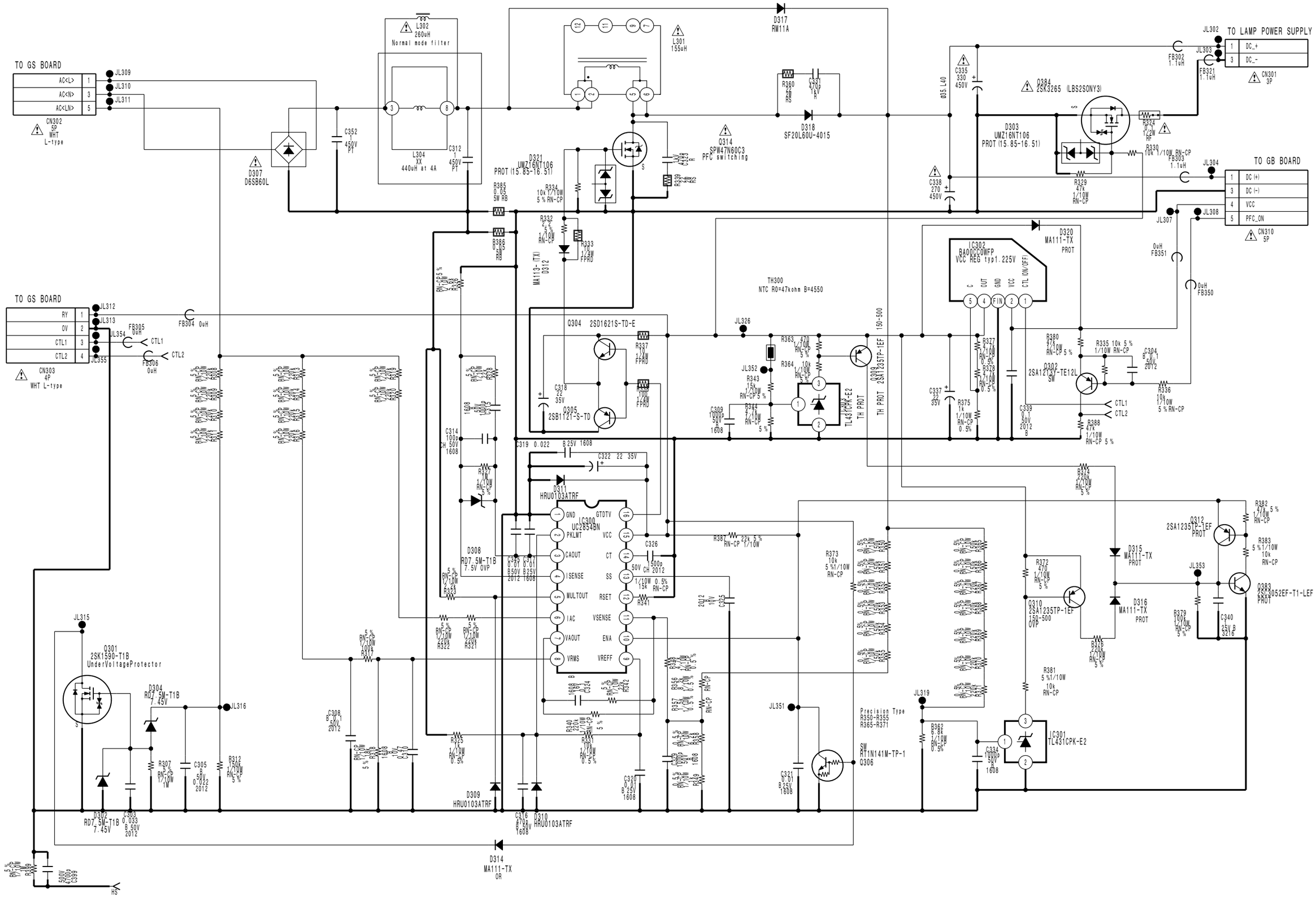
TO GS BOARD
AC<L>
AC<N>
AC<LN>
CN302 5P WHT L-type
JL309
JL310
JL311
D307 D6SB60L
C352 1 450V PT
L302 260uH Normal mode filter
L304 XX 440uH at 4A
C312 1 450V PT
L301 155uH
D317 RM11A
R360 2W RS
C331 470 1kV R
D318 SF20L60U-4015
Q314 SPW47N60C3 PFC switching
D321 UMZ16NT106 PROT (15.85-16.51)
R334 10k 1/10W 5 % RN-CP
R385 0.05 5W RS
R386 0.05 5W RS
R332 5.5 1/10W RN-CP
R333 1/2W FPRD
MA113-(TX) D312
C335 330 450V
C338 270 450V
Q384 2SK3265 (LBS2SONY3)
D303 UMZ16NT106 PROT (15.85-16.51)
R324 0.1 1/2W RF
R330 10k 1/10W RN-CP
R329 47k 1/10W RN-CP
JL302
JL303
FB302 1.1uH
FB321 1.1uH
TO LAMP POWER SUPPLY
DC_+
DC_-
CN301 3P
FB303 1.1uH
JL304
TO GB BOARD
DC (+)
DC (-)
VCC
PFC_ON
CN310 5P
JL307
JL308
D320 MA111-TX PROT
IC302 BA00CC0WFP VCC REG typ1.225V
CTL (ON/OFF)
0uH FB351
0uH FB350
TO GS BOARD
RY
OV
CTL1
CTL2
CN303 4P WHT L-type
JL312
JL313
JL354
JL355
FB305 0uH
FB306 0uH
FB304 0uH
TH300 NTC R0=47kohm B=4550
JL326
Q304 2SD1621S-TD-E
R337 1/2W FPRD
R338 100 1/2W FPRD
C318 22 35V
Q305 2SB1121-S-TD
R363 470 1/10W RN-CP 5 %
R364 10k 1/10W RN-CP 5 %
JL352
R343 15k 1/10W RN-CP 5 %
R344 1 1/10W RN-CP 5 %
C309 1000p 50V B 1608
Q309 2SA1235TP-1EF 150-500
TH PROT
IC301 TL431CDR-E2
R377 10k 1/10W RN-CP 0.5%
R378 1k 1/10W RN-CP 0.5%
C337 22 35V
R375 1k 1/10W RN-CP 0.5%
R380 1k 1/10W RN-CP 5 %
R335 10k 5 % 1/10W RN-CP
C304 6.8 50V 2012
Q302 2SA1235TP-TE12L SW
R336 10k 1/10W 5 % RN-CP
C339 0.1 50V 2012 B
R388 47k 1/10W RN-CP 5 %
CTL1
CTL2
R374 1/10W RN-CP 5 %
R382 47k 1/10W RN-CP 5 %
Q312 2SA1235TP-1EF PROT
R383 5 %1/10W 10k RN-CP
Q383 2SK3052EF-T1-LEF PROT
C314 100p 50V CH 1608
R327 1/10W RN-CP 5 %
C319 0.022 B 25V 1608
C322 22 35V
D311 HRU0103ATRF
IC300 UC2854BN
GND
PKLMT
CAOUT
ISENSE
MULTOUT
IAC
VAOUT
VRMS
GTDTV
VCC
CT
SS
RSET
VSENSE
ENA
VREFF
C326 1500p 50V CH 2012
R341 1/10W 0.5% RN-CP 15k
R387 22k 5 % RN-CP 1/10W
D308 RD7.5M-T1B 7.5V OVP
C339 0.01 B50V 2012
C317 0.01 B25V 1608
R333 5 % 1/10W RN-CP
R322 5 % 1/10W RN-CP 220k
R321 5 % 1/10W RN-CP 220k
R373 10k 5 %1/10W RN-CP
D315 MA111-TX PROT
R372 470 1/10W RN-CP 5 %
Q310 2SA1235TP-1EF 150-500 OVP
D316 MA111-TX PROT
R376 1k 1/10W RN-CP 5 %
R379 100k 1/10W RN-CP 5 %
C340 25V B 3216
R381 5 %1/10W 10k RN-CP
JL353
JL315
Q301 2SK1590-T1B UnderVoltageProtector
D304 RD7.5M-T1B 7.45V
JL316
R307 5 % 1/10W 1M
C305 0.022 B 50V 2012
R312 150k 1/10W RN-CP 5 %
C308 0.1 50V 2012
R325 1/10W RN-CP 0.5%
R340 220k 1/10W RN-CP 5 %
R331 10k 1/10W RN-CP 0.5 %
R326 1/10W RN-CP 0.5%
R356 8.2k 1/10W 0.5 %
R357 1.5k 1/10W 0.5 %
R358 1/10W RN-CP
R349 1/10W RN-CP
C320 0.01 B 25V 1608
C325 2012 10V
JL351
JL319
Precision Type R350-R355 R365-R371
SW R11N141M-TP-1 Q306
C331 0.01 B 25V 1608
R362 6.8k 1/10W RN-CP 0.5%
C334 1000p 50V B 1608
IC301 TL431CPK-E2
D309 HRU0103ATRF
C316 470p 50V 1608
D310 HRU0103ATRF
D302 RD7.5M-T1B 7.45V
C303 0.033 B 50V 2012
D314 MA111-TX OR
R389 1M 1/10W RN-CP 5 %
C399 470p 500V
HS

GA BOARD

*:B SIDE

D302	*B-4
D303	C-3
D304	*A-4
D307	B-3
D308	*B-3
D309	B-4
D310	B-3
D311	B-3
D312	C-3
D314	C-4
D315	C-3
D316	C-3
D317	A-1
D318	B-2
D320	C-4
D321	B-3
IC300	B-3
IC301	*A-2
IC302	C-4
IC303	*C-3
Q301	*B-4
Q302	D-4
Q304	*C-3
Q305	*B-3
Q306	C-4
Q309	C-3
Q310	C-3
Q312	C-3
Q314	B-2
Q383	*C-3
Q384	C-3

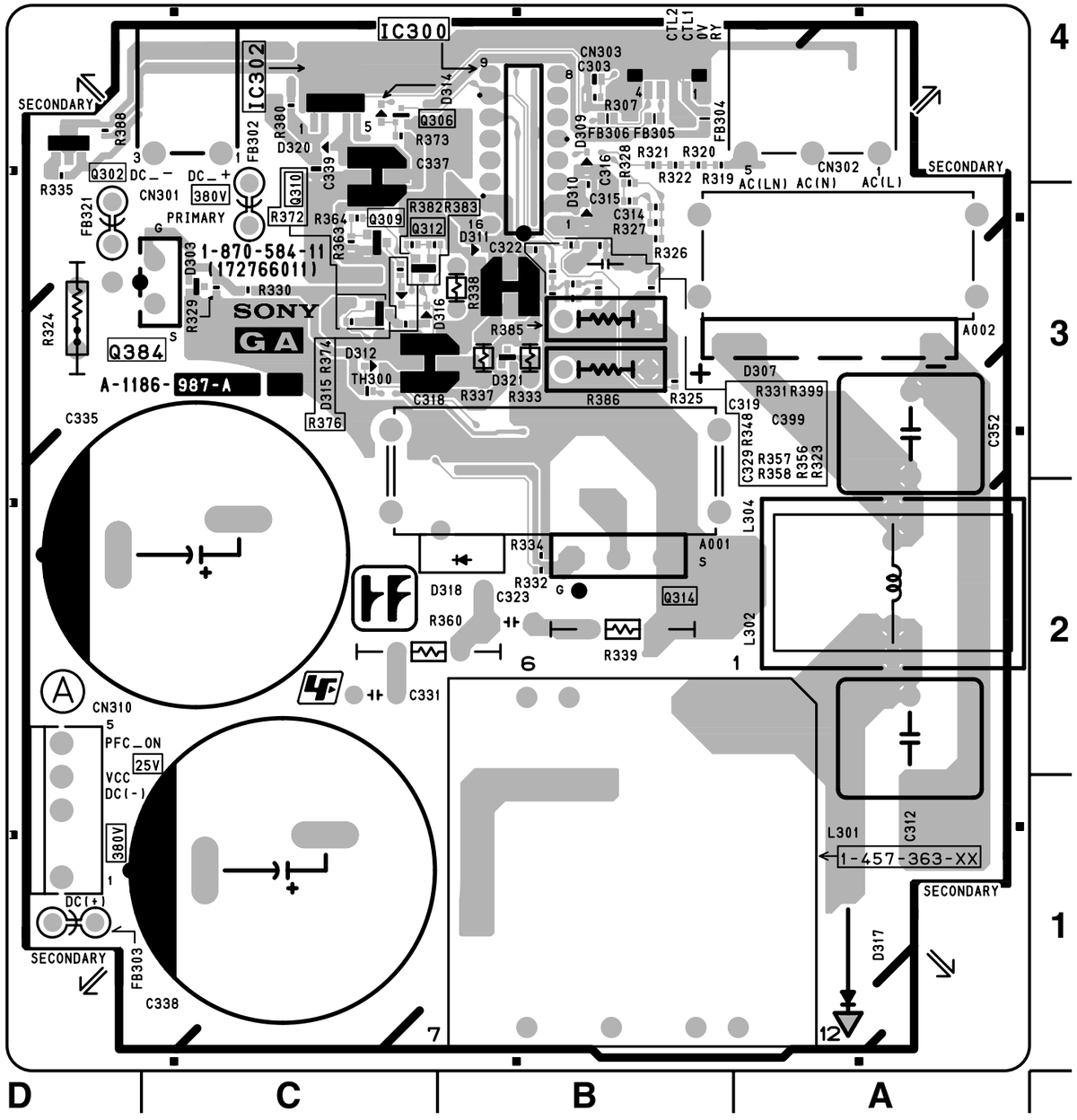

GA -A SIDE-

SUFFIX: -11

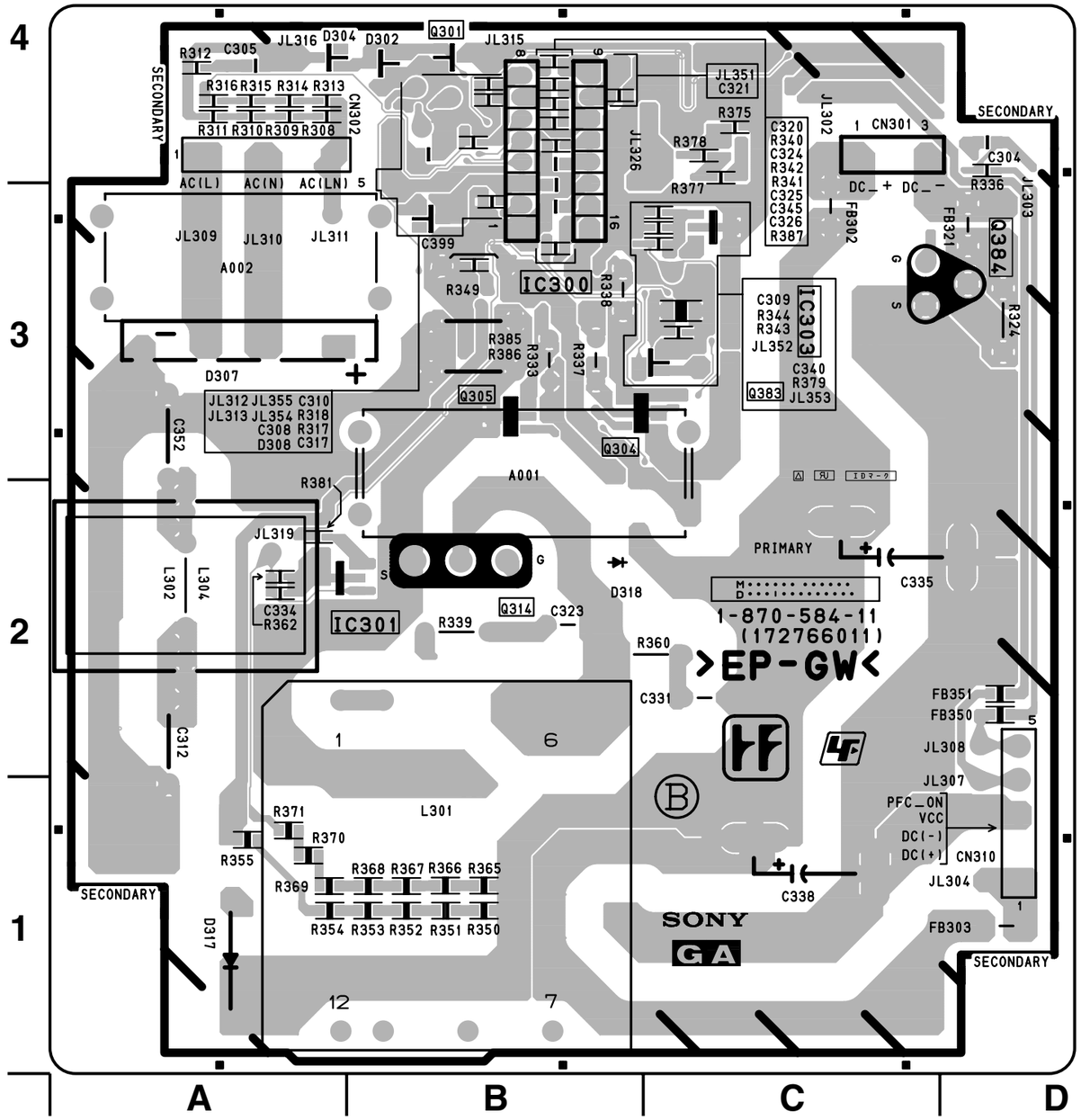

GA -B SIDE-
SUFFIX: -11

GB BOARD

*:B SIDE

D500	*B-2	Q500	B-1
D501	A-2	Q501	B-1
D502	*A-2	Q502	*B-2
D503	B-2	Q503	*C-2
D505	B-2	Q504	C-2
D506	D-1	Q505	C-2
D507	C-1	Q506	D-1
D508	C-2	Q507	D-1
D509	C-2	Q508	D-2
D510	*C-3	Q509	*C-2
D511	C-1	Q510	*D-2
D512	*C-2	Q511	*C-2
D513	D-1	Q512	*D-2
D514	D-1	Q513	*D-2
D515	D-1	Q600	D-1
D516	*C-2	Q601	E-1
D517	*C-2	Q630	E-2
D518	C-2	Q631	E-2
D519	D-2	Q700	A-3
D520	*D-1	Q701	A-3
D521	*D-1	Q702	A-3
D523	*C-2	Q703	A-4
D525	*D-2	Q704	A-4
D526	*C-2	Q705	E-4
D527	B-1	Q706	A-4
D529	B-1	Q707	A-4
D533	B-2	Q800	D-4
D534	*B-2		
D535	B-1	TP700	B-4
D536	A-2	TP701	B-2
D602	E-1	TP702	B-4
D603	E-1	TP800	D-3
D605	*D-1	TP801	D-4
D606	E-1	TP900	D-3
D632	E-2	TP901	D-3
D633	E-2	TP902	D-3
D650	*D-2		
D651	E-2		
D700	A-3		
D701	A-3		
D702	B-3		
D703	E-4		
D800	E-3		
D801	D-4		
D802	D-4		
D803	D-4		
D900	C-3		
D901	E-3		
D902	E-3		
IC500	A-2		
IC501	D-2		
IC502	C-2		
IC503	D-2		
IC600	E-1		
IC630	E-2		
IC700	B-4		
IC701	A-4		
IC702	A-4		
IC703	E-4		
IC704	B-4		
IC705	A-3		
IC706	B-3		
IC800	E-3		
IC801	D-4		
IC802	D-4		
IC803	C-4		
IC900	C-3		
IC901	D-3		
IC902	D-4		
IC903	D-4		
IC904	E-3		
IC905	E-3		

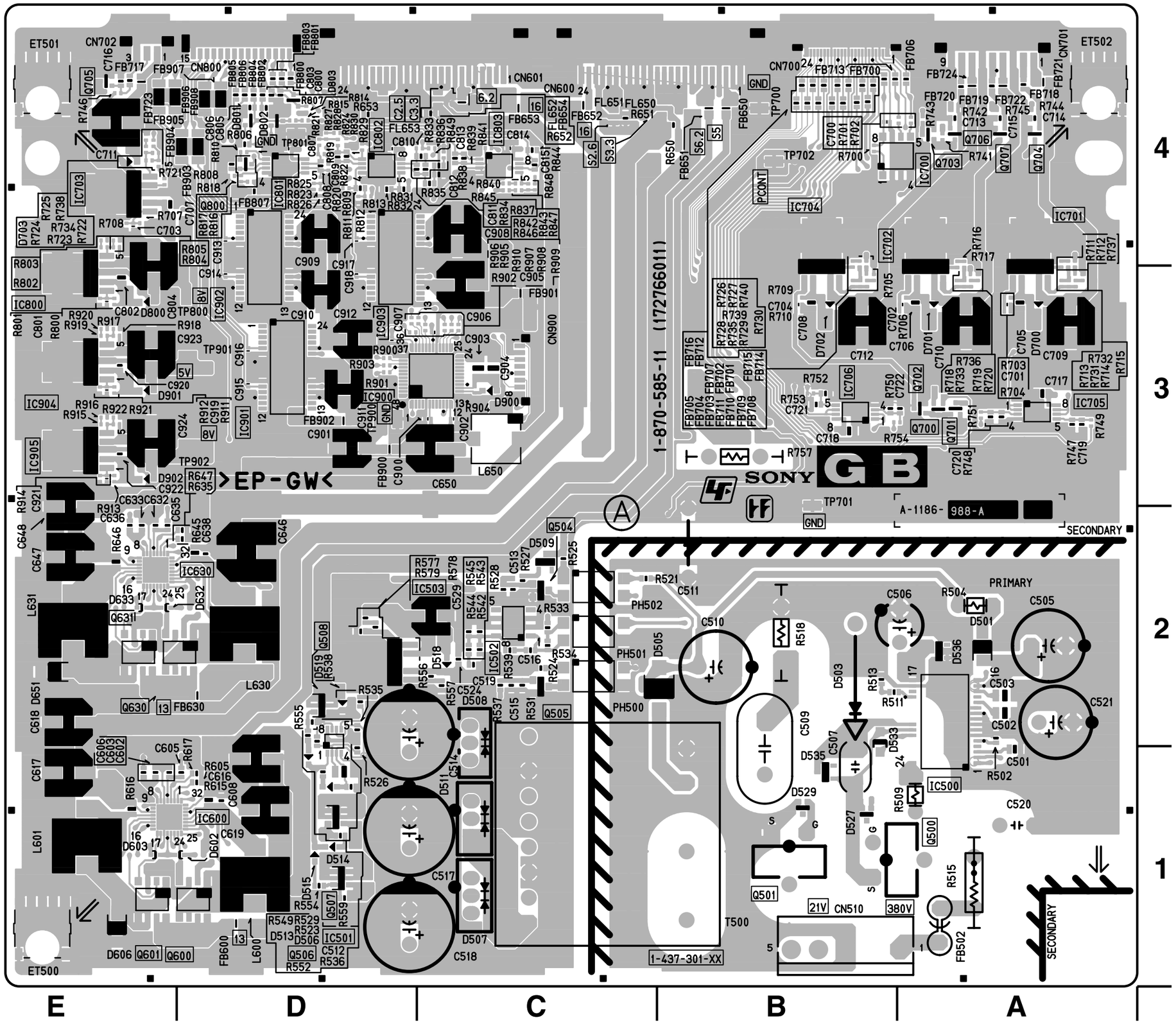

GB -A SIDE-

SUFFIX: -11

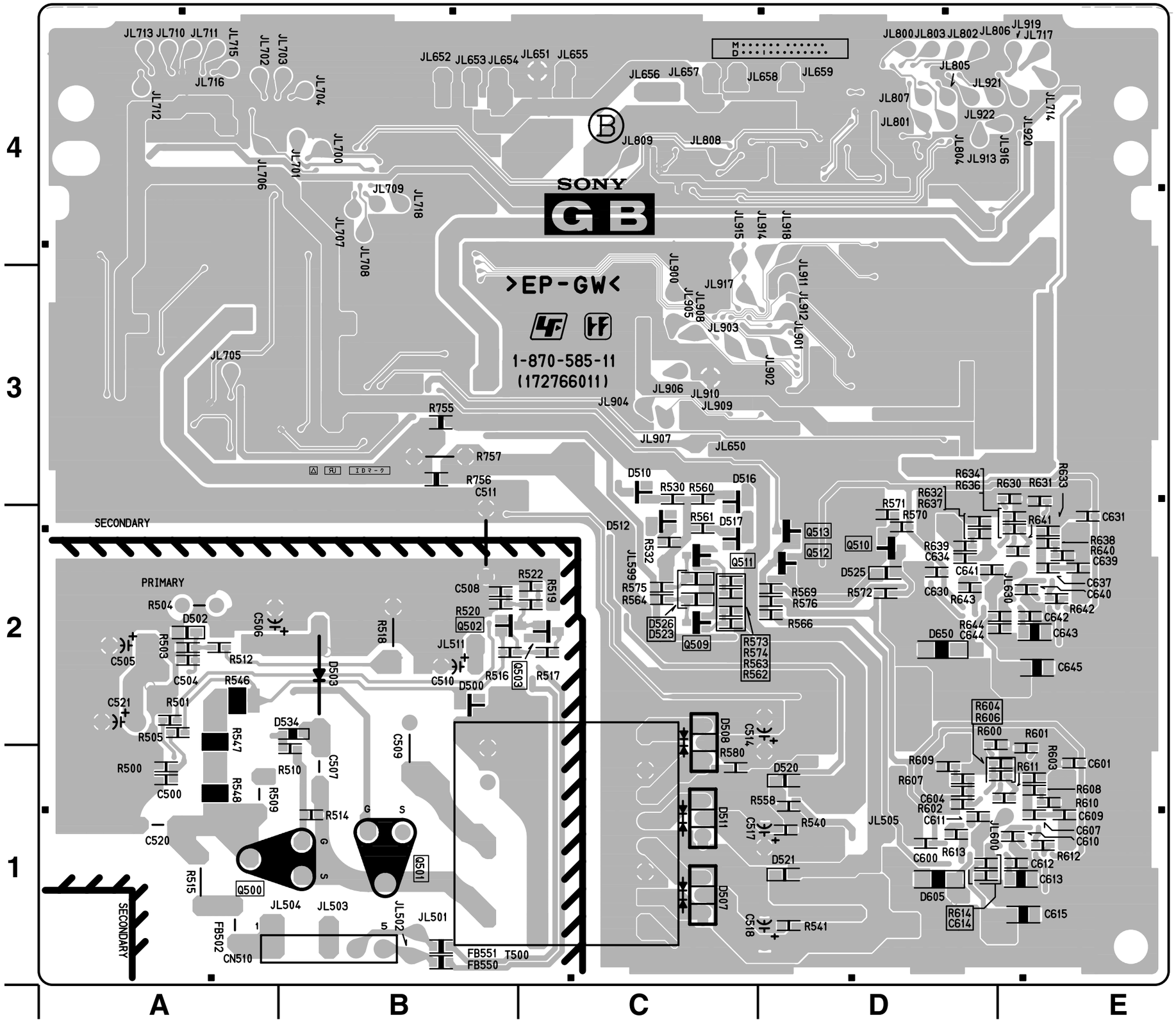

GB -B SIDE-
SUFFIX: -11

 GB (1/5)

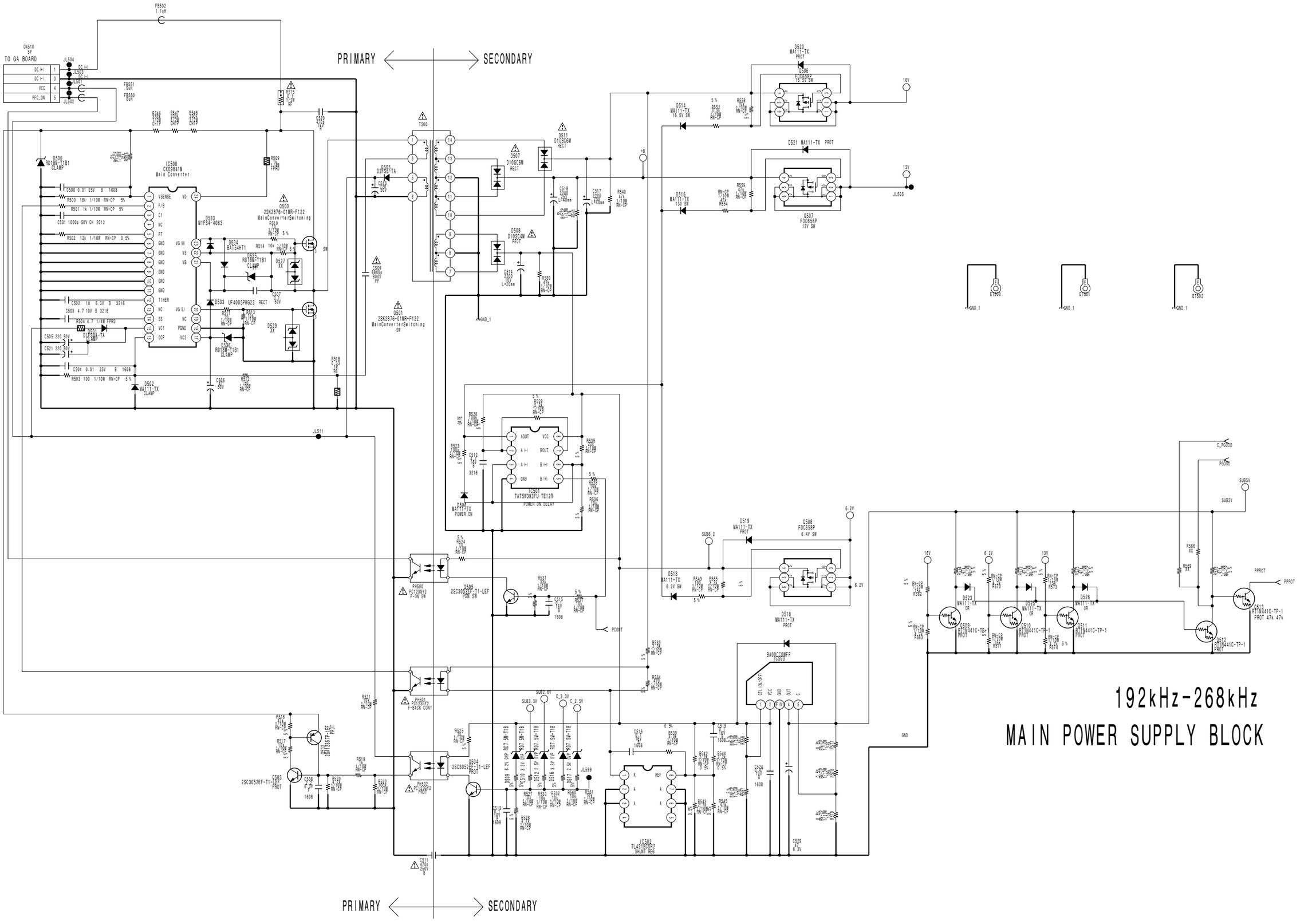
PRIMARY
SECONDARY
TO GA BOARD
CN510
SP
DC (+)
DC (-)
VCC
PFC_ON
IC500
CXD9841M
Main Converter
Q500
2SK2876-01MR-F122
MainConverterSwitching
Q501
2SK2876-01MR-F122
MainConverterSwitching
SW
T500
IC501
TA75W393FU-TE12R
POWER ON DELAY
IC502
TL431BCDR2
SHUNT REG
IC503
BA00CC0WFP
PH500
PC123GY2
P-ON SW
PH501
PC123GY2
F-BACK CONT
PH502
PC123GY2
PROT
Q505
2SC3052EF-T1-LEF
PON SW
Q504
2SC3052EF-T1-LEF
PROT
Q503
2SC3052EF-T1-LEF
PROT
Q506
FDC658P
16.5V SW
Q507
FDC658P
13V SW
Q508
FDC658P
6.4V SW
D500
RD18M-T1B1
CLAMP
D501
DF50A-TA
CLAMP
D502
MA111-TX
CLAMP
D503
UF4005PKG23
RECT
D504
RD7.5M-T1B
D505
D2FS6-TA
D506
MA111-TX
POWER ON
D507
D10SC6M
RECT
D508
D10SC4M
RECT
D509
RD6.8M-T1B1
CLAMP
D510
RD7.5M-T1B
D511
D10SC6M
RECT
D512
RD7.5M-T1B
D513
MA111-TX
6.2V SW
D514
MA111-TX
16.5V SW
D515
MA111-TX
13V SW
D516
RD3.9M-T1B
D517
RD2.9M-T1B
D518
MA111-TX
PROT
D519
MA111-TX
PROT
D520
MA111-TX
PROT
D521
MA111-TX
PROT
D522
MA111-TX
OR
D523
MA111-TX
OR
D524
MA111-TX
OR
D525
MA111-TX
OR
D526
MA111-TX
OR
Q509
RN141C-TP-1
PROT
Q510
RN141C-TP-1
PROT
Q511
RN141C-TP-1
PROT
Q512
RN141C-TP-1
PROT
Q513
RN141C-TP-1
PROT 47k, 47k
Q514
2SB1353T-TP-1
PROT
Q515
2SB1353T-TP-1
PROT
Q516
2SB1353T-TP-1
PROT
Q517
2SB1353T-TP-1
PROT
Q518
FDC658P
6.4V SW
ET500
ET501
ET502
GND_1
JL504
JL505
JL511
JL599
16V
13V
6.2V
SUB5V
SUB6.2
SUB3.3V
C_3.3V
C_2.5V
PCONT
PPROT
C_PGOOD
PGOOD
GND
192kHz-268kHz
MAIN POWER SUPPLY BLOCK

 6-30

GB (2/5)

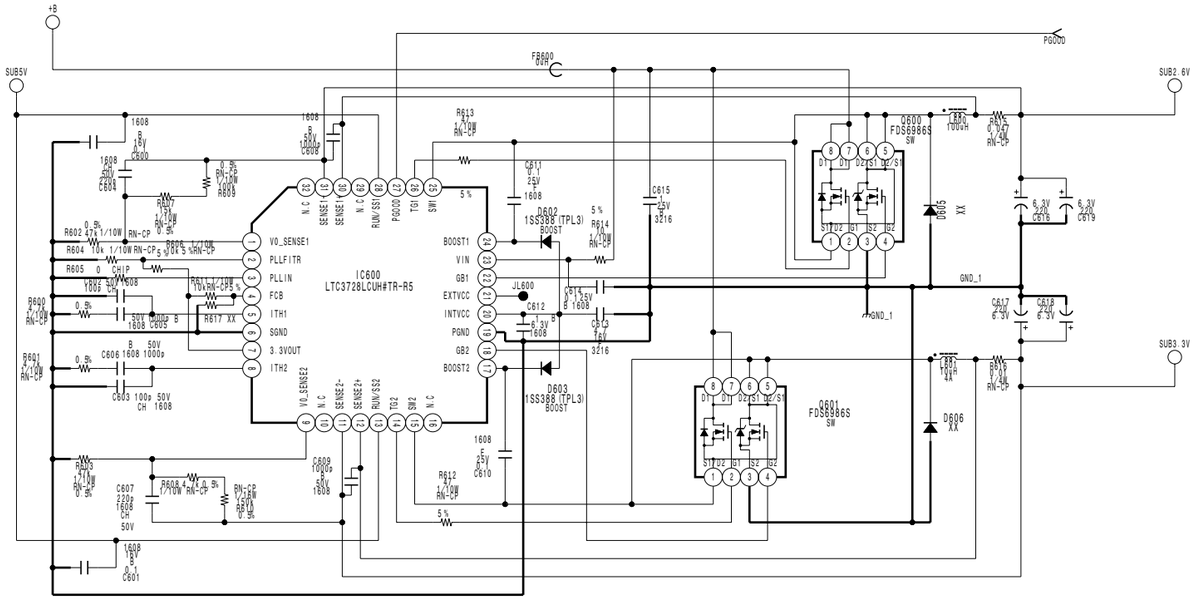

DC-DC CON. SUB3.3V and SUB2.6V for Q board

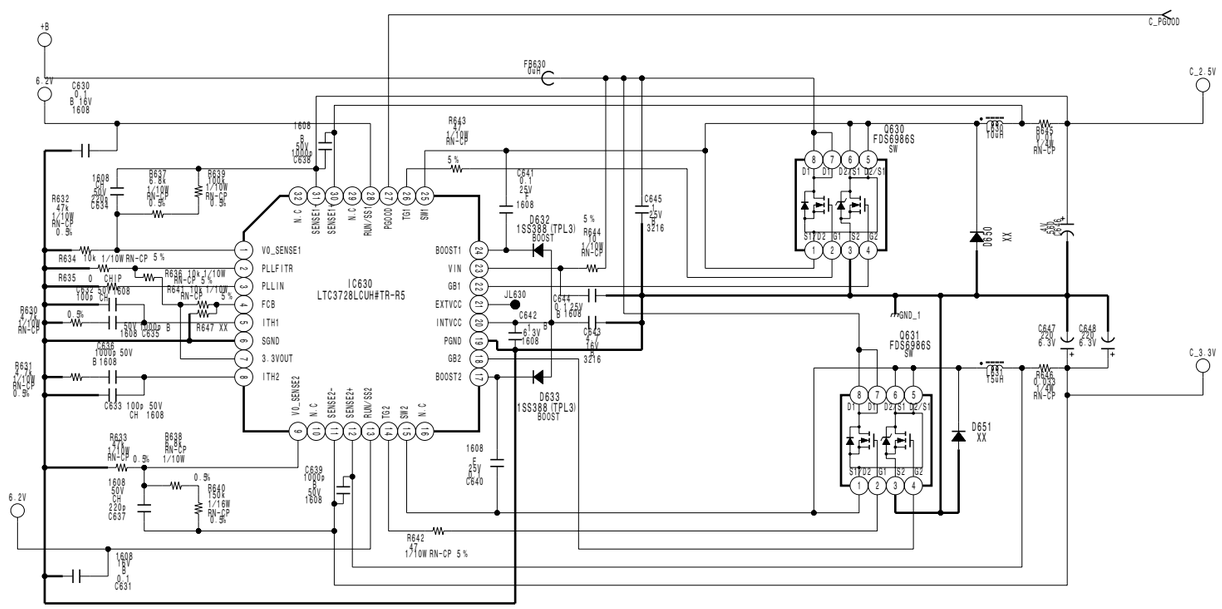

DC-DC CON. 3.3V and 2.5V for C board

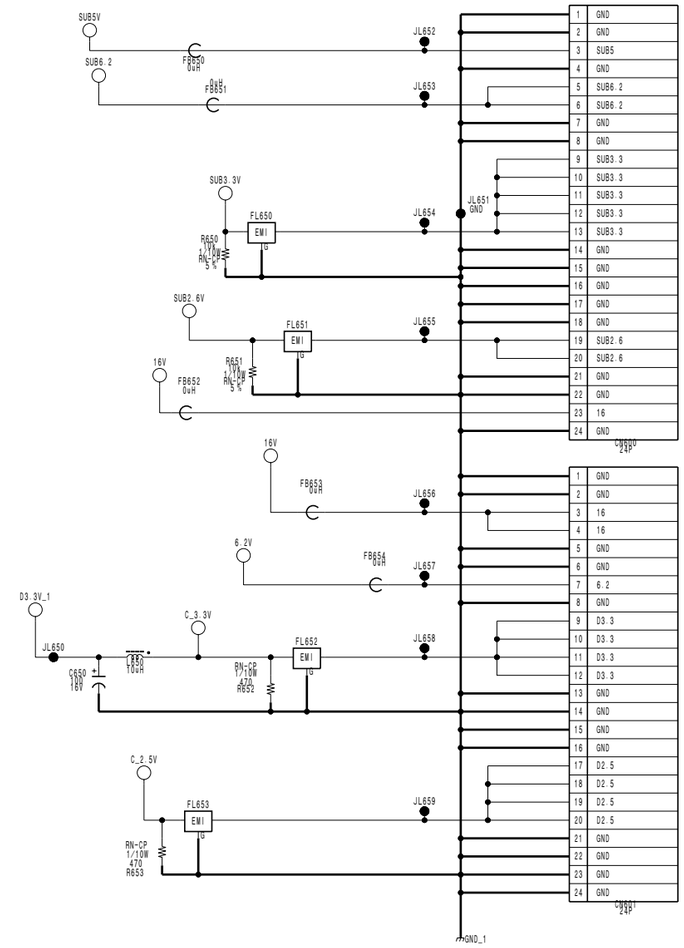

250kHz
DC-DC CONVERTER

6-31

GB (3/5)

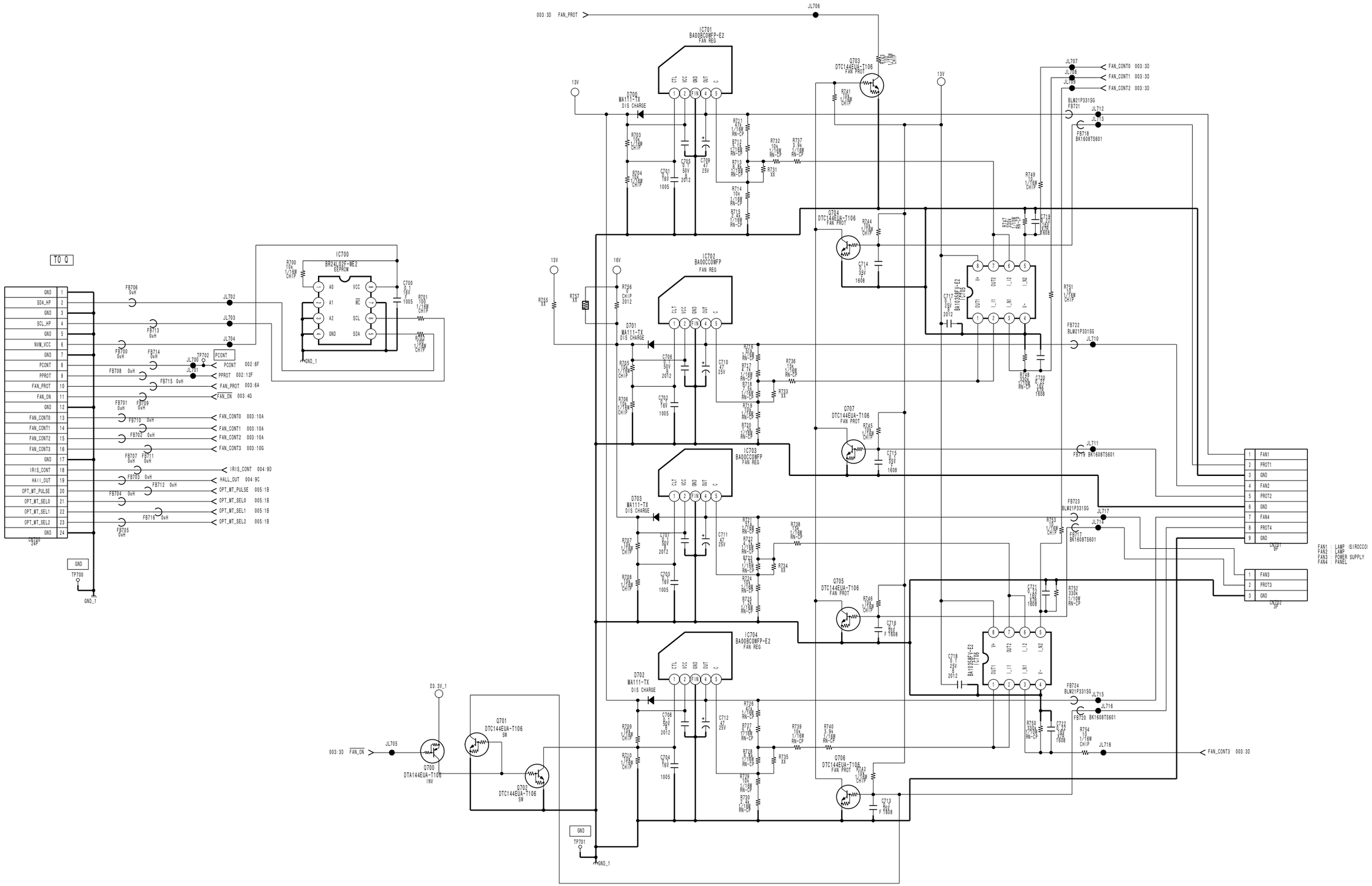
IC700
BR24L02F-WE2
EEPROM
IC701
BA00BCOMFP-E2
FAN REG
IC702
BA00CCOWFP
FAN REG
IC703
BA00CCOWFP
FAN REG
IC704
BA00BCOWFP-E2
FAN REG
BA10358FV-E2
IC705
BA10358FV-E2
IC706
Q700
DTA144EUA-T106
INV
Q701
DTC144EUA-T106
SW
Q702
DTC144EUA-T106
SW
Q703
DTC144EUA-T106
FAN PROT
Q704
DTC144EUA-T106
FAN PROT
Q705
DTC144EUA-T106
FAN PROT
Q706
DTC144EUA-T106
FAN PROT
Q707
DTC144EUA-T106
FAN PROT
D700
MA111-TX
DIS CHARGE
D701
MA111-TX
DIS CHARGE
D702
MA111-TX
DIS CHARGE
D703
MA111-TX
DIS CHARGE
TO Q
GND
SDA_HP
SCL_HP
NVM_VCC
PCONT
PPROT
FAN_PROT
FAN_ON
FAN_CONT0
FAN_CONT1
FAN_CONT2
FAN_CONT3
IRIS_CONT
HALL_OUT
OPT_MT_PULSE
OPT_MT_SEL0
OPT_MT_SEL1
OPT_MT_SEL2
FAN1
PROT1
FAN2
PROT2
PROT4
FAN3
PROT3
FAN1 : LAMP (SIROCCO)
FAN2 : LAMP
FAN3 : POWER SUPPLY
FAN4 : PANEL

6-32

GB (4/5)

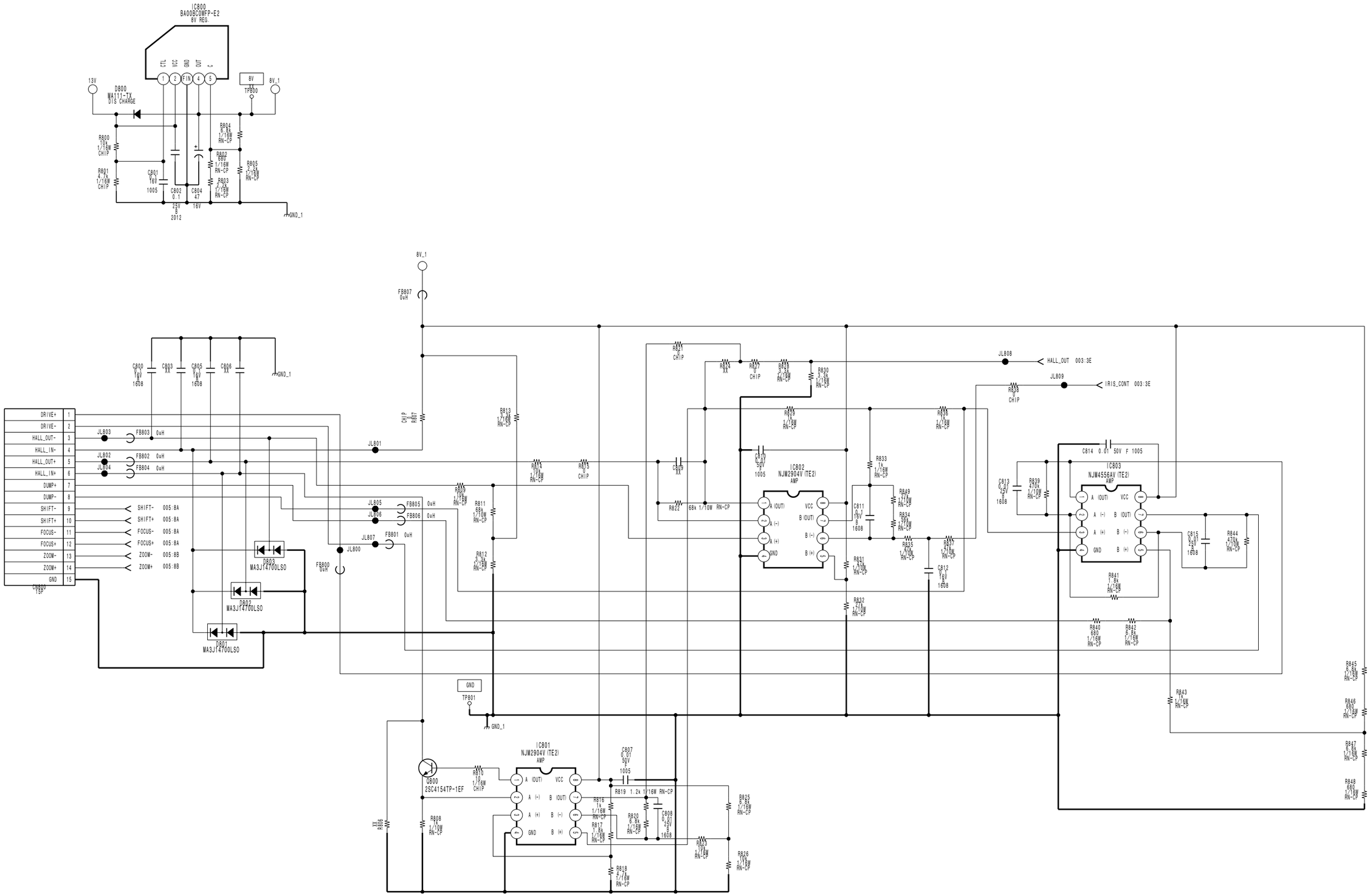

IRIS

6-33

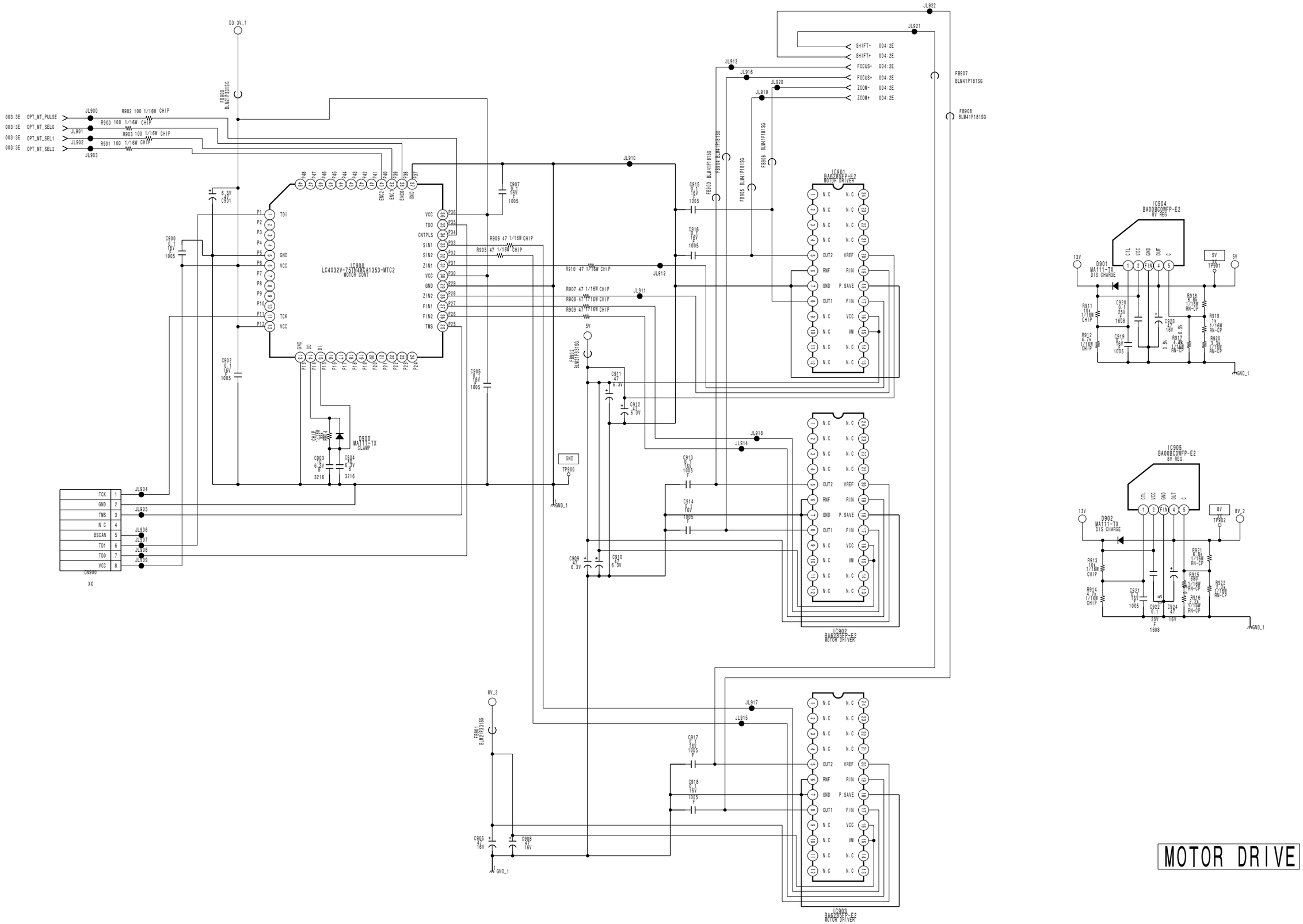
IC900
LC4032V-75TN33A1353-MTC2
MOTOR CONT
IC901
BA6285FP-E2
MOTOR DRIVER
IC902
BA6285FP-E2
MOTOR DRIVER
IC903
BA6285FP-E2
MOTOR DRIVER
IC904
BA00BC0WFP-E2
8V REG.
IC905
BA00BC0WFP-E2
8V REG.
D900
MA111-TX
CLAMP
D901
MA111-TX
DIS CHARGE
D902
MA111-TX
DIS CHARGE
CN900
SHIFT-
SHIFT+
FOCUS-
FOCUS+
ZOOM-
ZOOM+
OPT_MT_PULSE
OPT_MT_SEL0
OPT_MT_SEL1
OPT_MT_SEL2
TCK
GND
TMS
N.C
BSCAN
TD1
TD0
VCC
D3.3V_1
8V_2
13V
5V
GND_1

MOTOR DRIVE

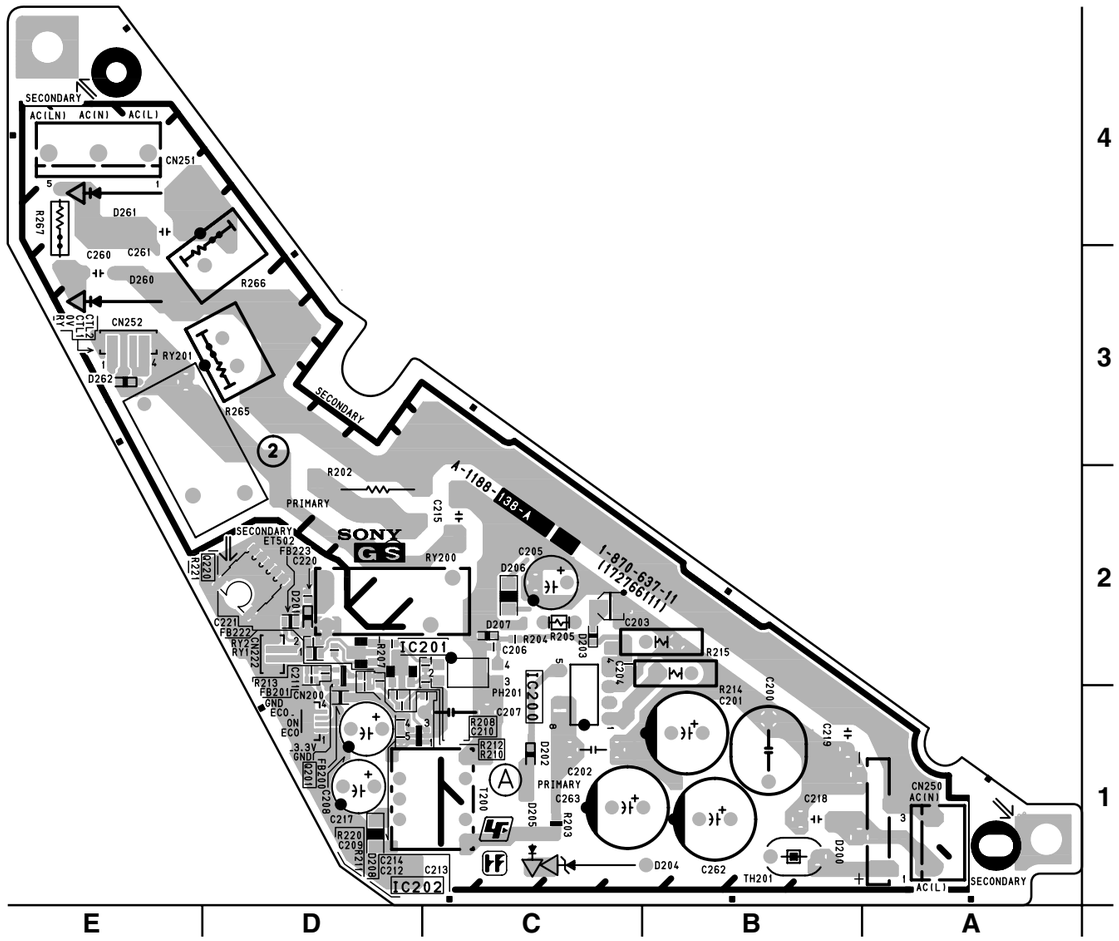

GS -A SIDE-
SUFFIX: -11

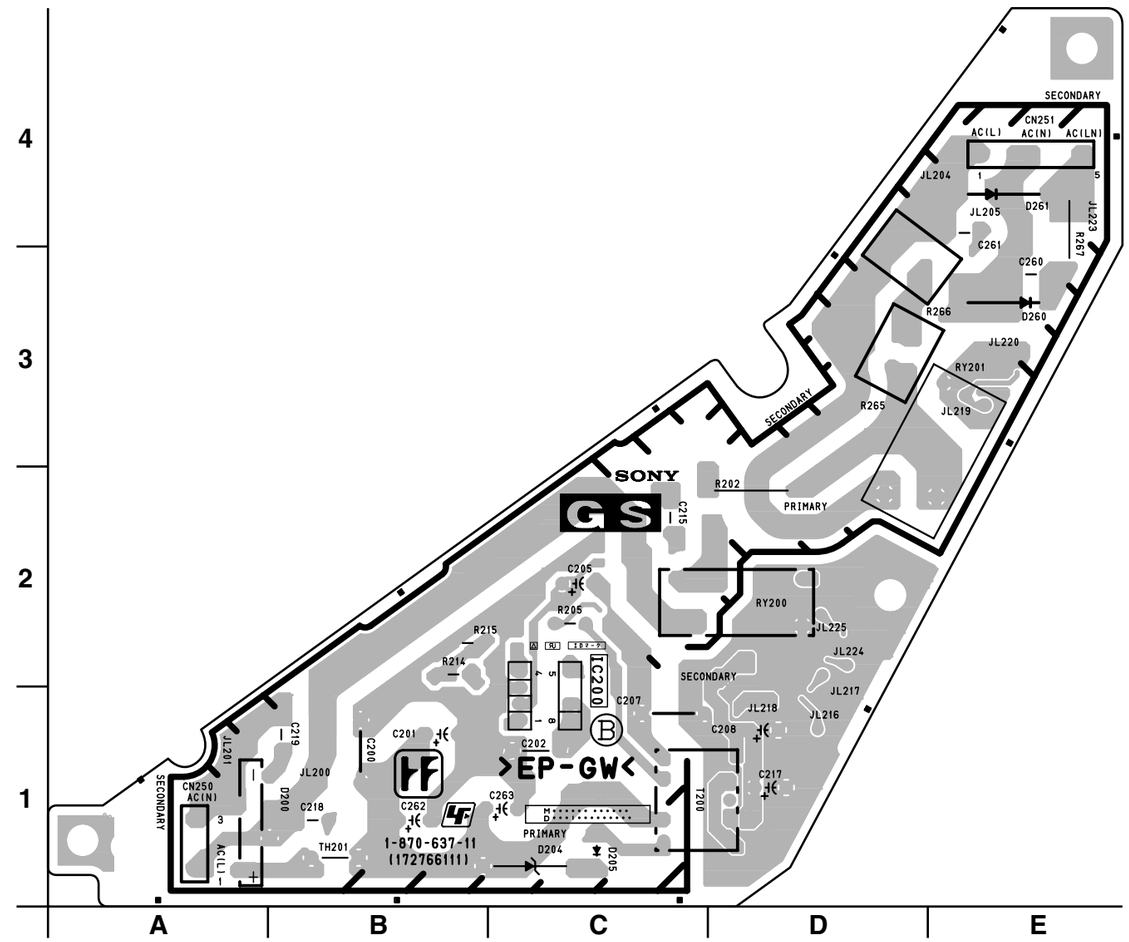

GS -B SIDE-
SUFFIX: -11

GS BOARD

*:B SIDE

D200	A-1
D201	D-2
D202	C-1
D203	C-2
D204	B-1
D205	C-1
D206	C-2
D207	C-2
D208	D-1
D260	E-3
D261	E-4
D262	E-3
IC200	C-1
IC201	D-2
IC202	D-1
Q201	D-2
Q220	D-2

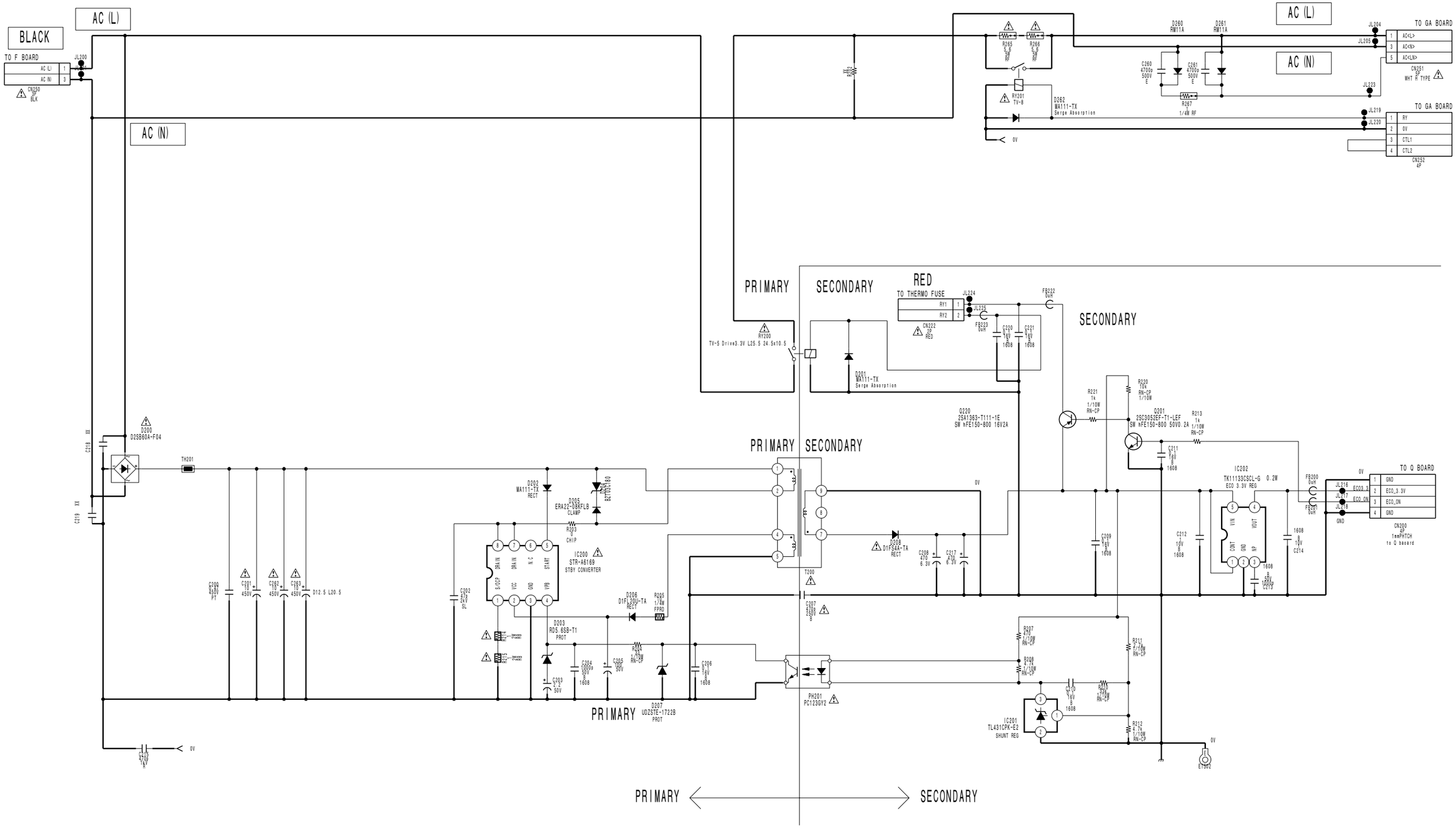

STANDBY POWER SUPPLY BLOCK 63kHz-120kHz

HA HA

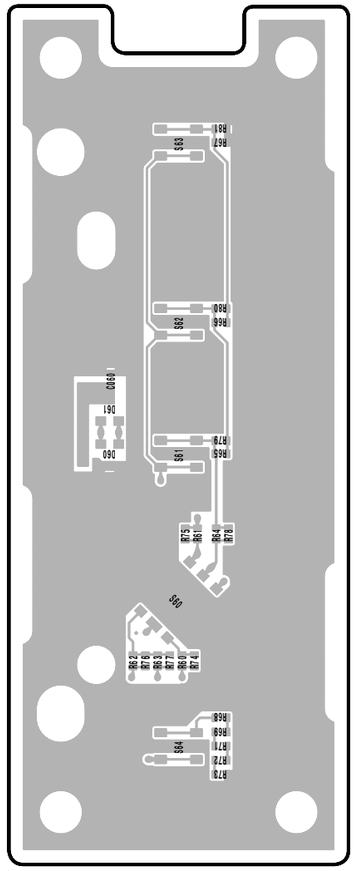

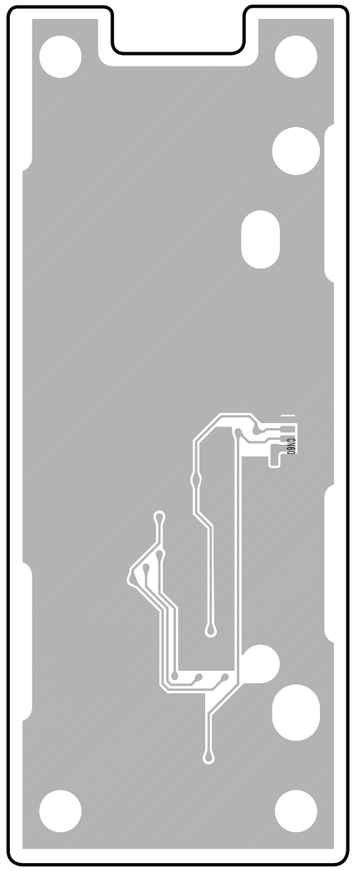

HA -A SIDE-

SUFFIX: -11

HA -B SIDE-

SUFFIX: -11

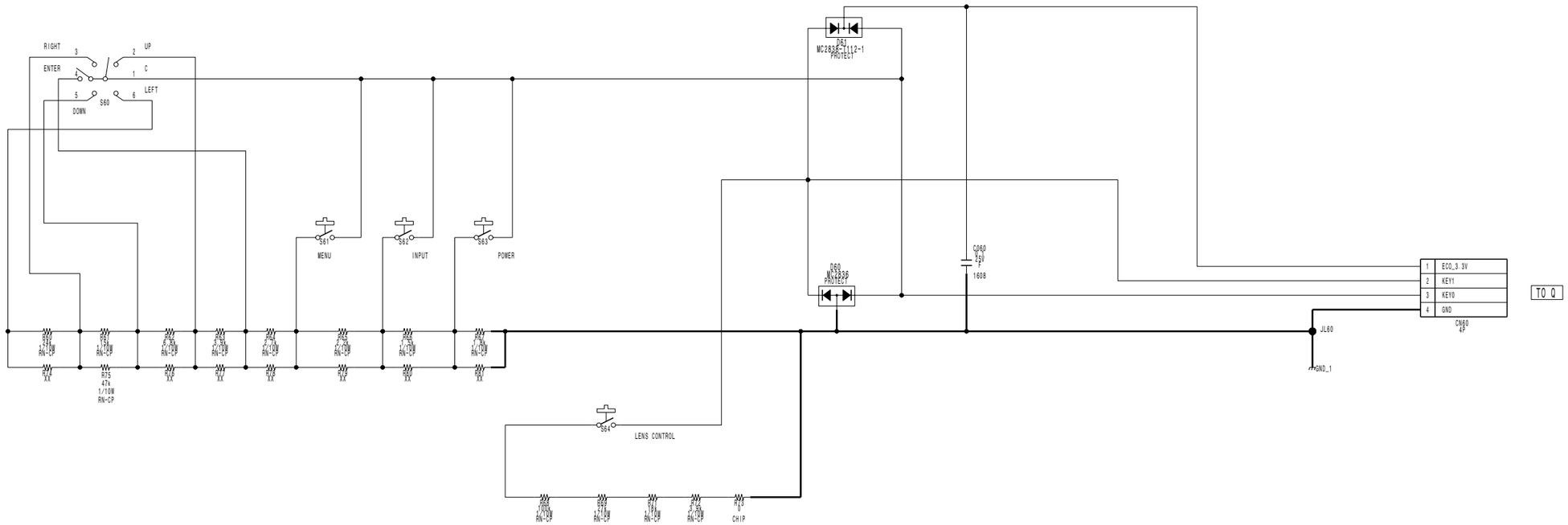

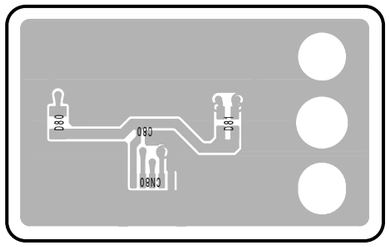

HB -A SIDE-
SUFFIX: -11

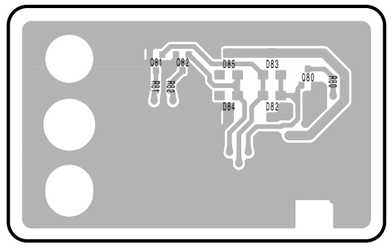

HB -B SIDE-
SUFFIX: -11

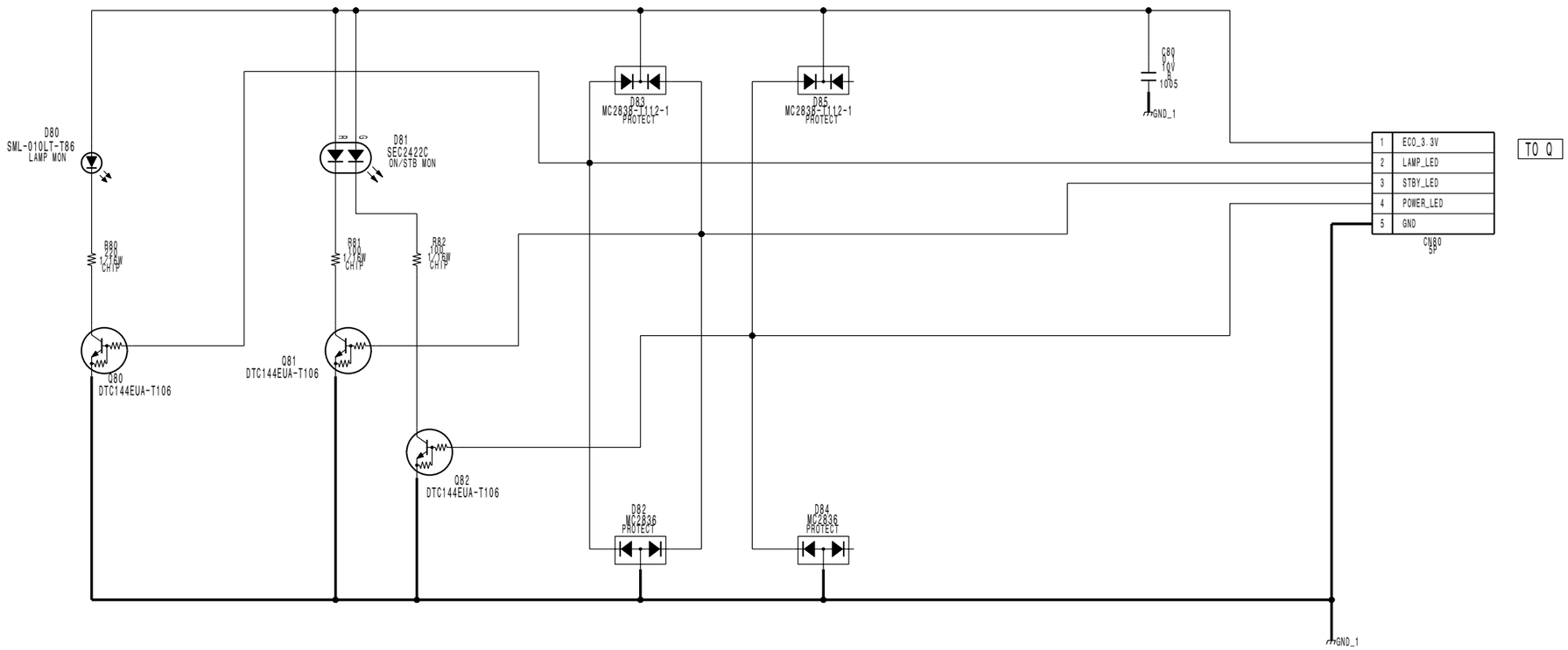

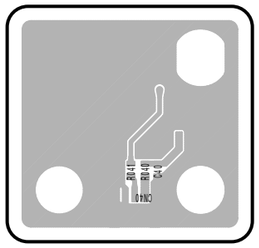

NF -A SIDE-
SUFFIX: -11

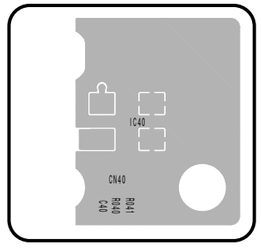

NF B SIDE-
SUFFIX: -11

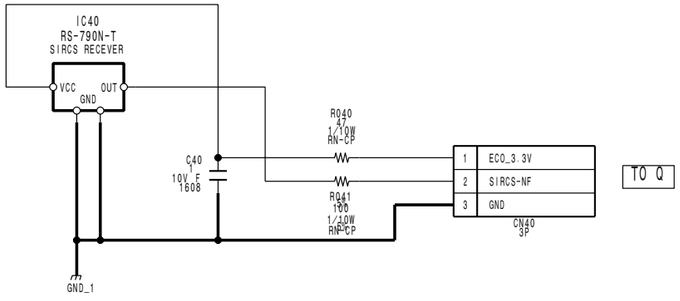

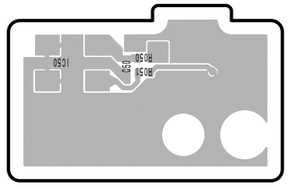

NR -A SIDE-
SUFFIX: -11

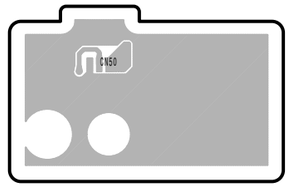

NR -B SIDE-
SUFFIX: -11

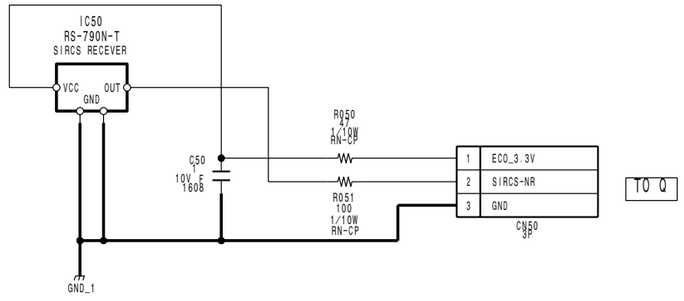

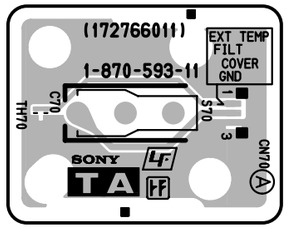

TA -A SIDE-
SUFFIX: -11

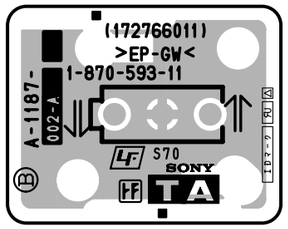

TA -B SIDE-
SUFFIX: -11

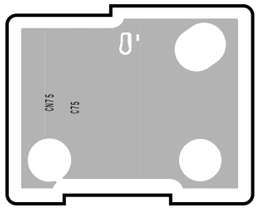

TL -A SIDE-
SUFFIX: -11

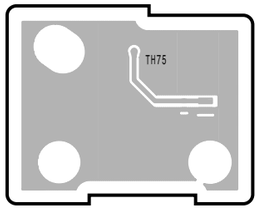

TL -B SIDE-
SUFFIX: -11

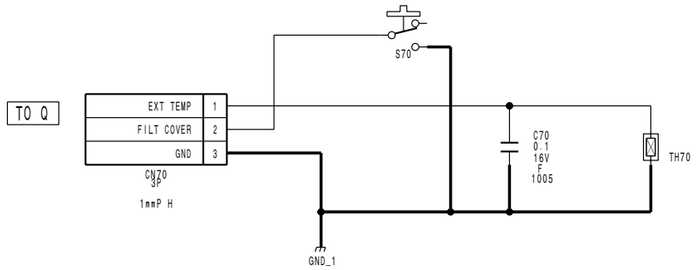

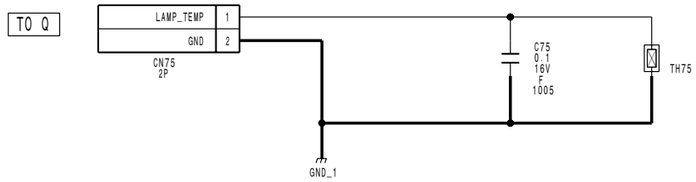

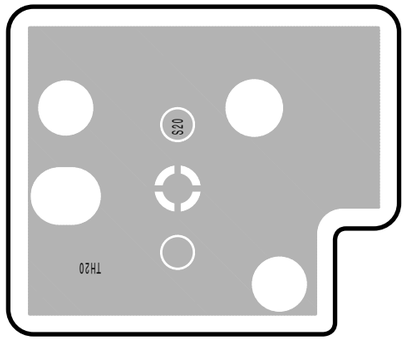

U -A SIDE-
SUFFIX: -11

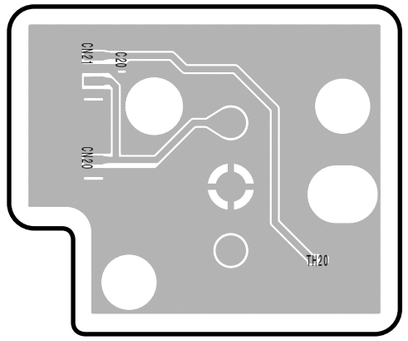

U -B SIDE-
SUFFIX: -11

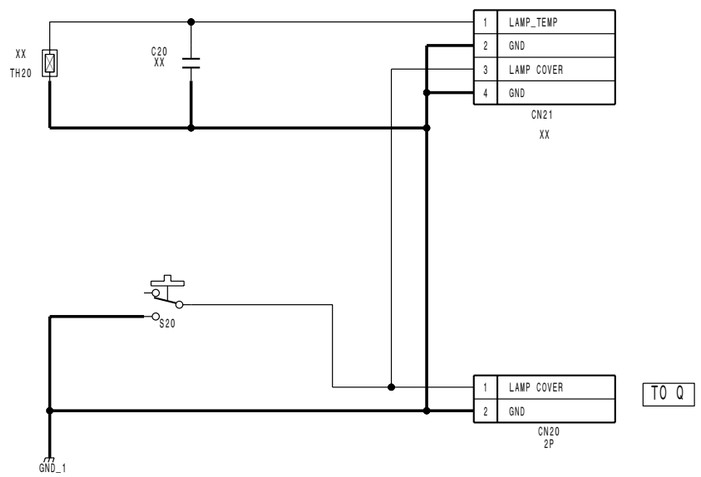

6-41

SAFETY CHECK-OUT

After correcting the original service problem, perform the following safety checks before releasing the set to the customer :

Check the metal trim, “metallized” knobs, screws, and all other exposed metal parts for AC leakage. Check leakage as described below.

LEAKAGE TEST

The AC leakage from any exposed metal part to earth ground and from all exposed metal parts to any exposed metal part having a return to chassis, must not exceed 3.5 mA. Leakage current can be measured by any one of three methods.

1. A commercial leakage tester, such as the Simpson 229 or RCA WT-540A. Follow the manufacturers’ instructions to use these instruments.
2. A battery-operated AC milliammeter. The Data Precision 245 digital multimeter is suitable for this job.
3. Measuring the voltage drop across a resistor by means of a VOM or battery-operated AC voltmeter. The “limit” indication is 5.25 V, so analog meters must have an accurate low-voltage scale. The Simpson 250 and Sanwa SH-63Trd are examples of a passive VOM that is suitable. Nearly all battery operated digital multimeters that have a 20 V AC range are suitable. (See Fig. A)

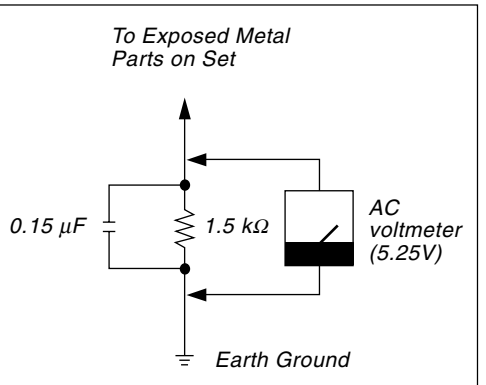

Fig A. Using an AC voltmeter to check AC leakage.

VPL-VW50 (SY) E
9-883-613-01

Sony EMCS Corporation
Ichinomiya Tec

English
2006HR16-1
©2006